JAWAHARLAL NEHRU PORT TRUST

SPECIAL ECONOMIC ZONE

DEVELOPMENT CONTROL AND PROMOTION REGULATIONS

2020

Team One Architects India Pvt Ltd

Master Planning Consultant for JNPT SEZ

CONTENTS

PART-I: ADMINISTRATION 1

1 Short Title, Jurisdiction and Commencement 1

2 Definitions 2

3 Procedure for Securing Development Permission 12

4 Development works to be Planned, Designed, Submitted and Supervised by Registered Professionals 15

5 Development Permission Fees 16

6 Decision of the SPA of JNPT SEZ 18

7 Deviations during Construction 18

8 Development undertaken on behalf of Government 18

9 Permission for Temporary Construction 19

10 Responsibilities of the Applicant 20

11 Inspection 21

12 Occupancy Certificate 22

13 Structural Safety of Buildings 23

14 Clearances from other Authorities 23

15 Discretionary Powers 23

PART II - DEVELOPMENT CONTROL AND PROMOTION REGULATIONS 24

A - MACRO CONTROL 24

16 Classifications of Zones and permissible land uses 24

17 Requirement of site 27

18 Layout of Land 28

19 Floor Space Index (FSI) 29

20 Building Heights 32

21 Urban Design Controls 32

B - MICRO CONTROLS 35

22 Marginal Open Spaces around Buildings 35

23 Means of access and Internal Roads in Layout: 37

24 Inner and Outer Chowks 38

25 Room Sizes 39

26 Height of Rooms 39

27 Apertures for light and Ventilation 40

28 Balconies 41

29 Loft and Mezzanine 41

30 Staircases 42

31 Lifts 42

32 Basements....43
33 Podium....44
34 Overhead Tanks....45
35 Septic Tanks....45
36 Car Parking and Loading & Unloading....47
37 Boundary Walls and Gate....48
38 Tree Plantation....49
39 Fire Protection and Life Safety Regulations....50
40 Structural design and building services....68
41 Water Supply, Drainage and Sanitary Requirements....68
42 Fuel Stations and Weigh Bridges....71
43 Erections of Hoardings and Signage....71
44 Regulations for Physically Challenged Persons....71
45 Rainwater Harvesting....71
46 Solar Energy Assisted System....71
APPENDIX I – Water Supply, Drainage & Sanitary Requirements....73
APPENDIX II – Guidelines for Parking and Circulation spaces....81
APPENDIX III Special provisions for Fuel Stations and Weigh Bridges....83
APPENDIX IV - Regulations for Erection of Hoardings and Signage....84
APPENDIX V Special Regulations for Physically Challenged Persons....85
APPENDIX VI Special Regulations for Rain Water Harvesting....88
APPENDIX VII Regulations for Installation of Solar Energy Assisted Systems....90
APPENDIX VIII - Forms....92

LIST OF TABLES

Table 1 Notations for Preparation of Plans 14
Table 2 Drawing Sheet Sizes 15
Table 3 Scale of Scrutiny Fees 16
Table 4: Scale of fees for Revalidation of C.C 17
Table 5: Zones and Broad Description 24
Table 6 Uses Permitted in Respective Zones 24
Table 7 Distance from electric lines 27
Table 8 Permissible FSI 29
Table 9 Marginal Open Spaces for plots 35
Table 10 Minimum width of Road 38
Table 11 Size of habitable room, Bathrooms and WCs 39
Table 12 Height of Rooms 39
Table 13 Extent of Lofts 41
Table 14 Minimum Width of Stairways and Corridors 42
Table 15 Minimum clear widths from plot boundary to edge of basements 43
Table 16 Size of Parking for different Vehicular Modes 47
Table 17 Parking requirement for various Land-uses/Buildings 47
Table 18 Travel distance 55
Table 19 Occupant Load 68
Table 20 Per Capita Water Requirements for Various Occupancies/Uses 69
Table 21 Flushing Storage Capacities 69

PART-I: ADMINISTRATION

PREAMBLE

Jawaharlal Nehru Port Trust has been appointed as the Special Planning Authority (SPA) for development of Jawaharlal Nehru Port Trust Special Economic Zone Notified Area under its Notification no. TPS -1717/612/CR0219/17/UD-12 dated 20th December, 2017, by the Government of Maharashtra, in exercise of its powers conferred under clause (1B) of section 40 of the MR&TP Act, 1966. Therefore, SPA of JNPT SEZ, in exercise of powers under clause (d) of sub section 3 of section 40 of the said Act, makes the following Development Control & Promotion Regulations (DCPR) as a part of its Development Proposals as envisaged under clause (d) of sub-section (1B) of Section 40 read with Section 115, of the said Act.

1 Short Title, Jurisdiction and Commencement

1.1 Title

These Regulations shall be called the “JNPT SEZ Area Development Control & Promotion Regulations, 2020”.

1.2 Jurisdiction

These regulations shall apply to all developmental activities in the notified area under jurisdiction of SPA of JNPT SEZ.

1.3 Commencement

These regulations shall come into force from the day they are published in the official gazette with the prior sanction of the State Government. Till such time more stringent provisions of these regulations and the regulations in force shall be applicable.

Nothing in these regulations shall apply or effect any plan already approved or building constructed or under construction as per the approved plan, unless in the opinion of JNPT such building is unsafe or constitutes a hazard to the safety of the occupants either in the property or adjacent property.

1.4 Interpretation

If any question or dispute arises with regard to interpretation of any of these Regulations the matter shall be referred to Chairman JNPT and his decision on the interpretation of the provisions of these Regulations shall be final and binding on the parties concerned.

1.4.1 General

In these Regulations, the use of the present tense includes the future tense, the masculine gender includes the feminine and neuter genders, the singular number includes the plural number and plural number includes singular number. The word "person" includes a corporation as well as an individual; "writing" includes printing and

typing and "signature" includes thumb impression of a person unable to sign, provided that his name is written below such impression.

1.4.2 Sizes and dimensions

Wherever sizes and dimensions of rooms and spaces within buildings are specified, they mean the clear dimensions, unless otherwise specified in these Regulations.

1.5 Conformity to National Building Code of India

Any aspects not covered in the Regulations or in particular the planning, design and construction of the buildings and its appurtenant services shall be done to the satisfaction of the Authority. The latest version of the National Building Code of India shall be the reference document for conformity regarding the various aspects.

2 Definitions

In these Regulations, unless the context otherwise requires, the terms and expressions shall have the meaning indicated against each of them.

Terms, aspects and expressions not defined in these Regulations shall have the same meanings as in the Maharashtra Regional and Town Planning Act, 1966 (Mah. Act No. XXXVII of 1966) and the rules framed there under, and the National Building Code (NBC) of India 2016, as amended from time to time, as the case may be, unless the context otherwise requires.

2.1 **"Accessory building**" means a building separated from the main building on a plot, and put to one or more accessory uses.

2.2 **"Accessory use" means** use of the building subordinate and customarily incidental to the principal use.

2.3 **"Act"** means the Maharashtra Regional and Town Planning Act.1966 (Mah. Act No. XXXVII of 1966); as amended from time to time.

2.4 **"Addition and/or alteration"** means any change in existing authorized building or change from one occupancy to another, or a structural change, such as addition to the area or height or the removal of part of a building or a change to the structure, such as the construction or cutting into or removal of any wall or part of a wall, partition, column, beam, joist, floor including a mezzanine floor or other support, or a change to or closing of any required means of ingress or egress, or a change to fixtures or equipment, as provided in these Regulations. However, modification in respect of gardening, white washing, painting, plastering, pointing, paving and retiling shall not be deemed to be alteration

2.5 **"Advertising sign"** means any surface or structure with characters, letters or illustrations applied thereto and displayed in any manner whatsoever out of doors for the purpose of

advertising or giving information regarding or to attract the public to any place, person, public performance, article or merchandise, and which surface or structure is attached to, forms part of or is connected, with any building, or is fixed to a tree or to the ground or to any poll, screen, fence, hoarding or displayed in space; or in or over any water body included in the limits of 'notified area'.

2.6 **"Air-conditioning"** means the process of treating air to control simultaneously its temperature, humidity, cleanliness and distribution to meet the requirement of an enclosed space.

2.7 **"Amenity"** means roads, streets, open spaces, parks recreational grounds, play grounds, gardens, sports complex, parade ground, markets, primary schools, secondary schools, Colleges, Polytechnics, Clinics, dispensaries, hospitals, police station, fire station, parking lots, water supply, electric supply, street lighting, sewerage, drainage, public works and includes other utilities, services and conveniences.

2.8 **"Applicant"** Lessee/ Licensee of JNPT or irrevocable Registered Power of Attorney holder or any other document accepted by the SPA of the same.

2.9 **"Approved"** means approved by JNPT or SPA of JNPT SEZ.

2.10 **"Atrium"** means a sky lighted naturally/ artificially ventilated area in buildings, with no intermediate floors, often containing plants and used as circulation space or an entrance foyer**.** Means the area comprised of entrance lobby or common entrance hall of the building or common area at any floor level which serves as a Common Open Spaces for more than one floor. An area of Atrium to be counted in BUA/ Entrance Lobby provided it is used only as a sit-out place or circulation space for the movement of people and for no other purpose will be counted once for FSI computations

2.11 **"Balcony"** means a horizontal cantilevered projection, including parapet, handrail or balustrade to serve as a passage or sitting out place with at least one side fully open, except for the railing or parapet wall for safety.

2.12 **"Basement or cellar"** means the lower storey of a building below, or partly below the ground level.

2.13 **"Biotechnology Unit"** shall mean and include Biotechnology (BT) units which are certified by the Development Commissioner SEZ or any other officer authorized by him in this behalf.

2.14 **"Building"** means a structure, constructed with any materials whatsoever for any purpose, whether used for human habitation or not, and includes -foundation, plinth, walls, floors, roofs, chimneys, plumbing and building services, fixed platforms; verandahs, balconies, cornices, projections; part of a building or anything affixed thereto; any wall enclosing or intended to enclose land or space, signs and outdoor display structures; tanks constructed for storage of chemicals or chemicals in liquid form, except tents / Shamianas and tarpaulin shelters erected for temporary purposes for ceremonial occasions, with the permission of SPA of JNPT SEZ.

2.15 **"Building line"** means the line up to which the plinth of a building adjoining a street or an extension of a street or on a future street may lawfully extend and includes the lines prescribed, if any.

2.16 **"Built-up area"** means the area covered by a building on all floors including cantilevered portion, mezzanine floors if any, except the areas specifically exempted from the Floor Space Index under these Regulations.

2.17 **"Cabin**" means a non-residential enclosure constructed of non- load bearing partitions.

2.18 **"Canopy"** means a projection over any entrance.

2.19 **"Carpet area"** means the net usable floor area within a building excluding the area that is covered by the external walls, areas under services shafts, exclusive balcony or veranda area and exclusive open terrace area, but includes the area covered by the internal partition walls.

2.20 **"Chajja"** means a structural overhang provided over opening on external walls for protection from the weather.

2.21 **"Chairman"** means the Chairman of Jawaharlal Nehru Port Trust.

2.22 **"Chimney"** means a construction by means of which a flue is formed for the purpose of carrying products of combustion to the open air and includes a chimney stack and the flue pipe.

2.23 **"Chowk"** means a fully or partially enclosed space permanently open to the sky within a building at any level; an "inner chowk" being enclosed on all sides and an "outer chowk" having one unenclosed side.

2.24 **"Convenience Shops"** means shops, each with a carpet area not exceeding **20 Sq.m**

except where otherwise indicated and comprising those dealing with day to day requirements, as distinguished from wholesale trade or shopping.

2.25 **"Contiguous holding"** means a continuous piece of land in one ownership/lease.

2.26 **"Corridor"** means a common passage or circulation space including a common entrance foyer.

2.27 **"Courtyard"** means a space permanently open to the sky within the site around a structure.

2.28 **"Development"** with its grammatical variation means the carrying out of building, engineering, mining or other operations in, or over, or under land or the making of any material change, in any building, or land, or in the use of any building or land or any material and includes demolition of any existing building, structure or erection or part of such building, structure or erection and redevelopment, and layout and subdivision of any land and "to develop" shall be construed accordingly.

2.29 **"Drain"** means a system or a line of pipes, with their fittings and accessories such as manholes, inspection chambers, traps, gullies, floor traps used for drainage of buildings or yards appurtenant to the buildings within the same curtilage. A drain includes an open channel or conveying surface water or a system for the removal of any liquid.

2.30 **"Escalator"** A power driven, inclined, continuous stairway used for raising or lowering passengers**.**

2.31 **"Existing building"** means a building or structure existing authorizedly before the commencement of these Regulations.

2.32 **"Existing use"** means use of a building or a structure existing authorized before the commencement of these Regulations.

2.33 **"External wall"** means an outer wall of a building not being a partition wall, even though adjoining a wall of another building and also means a wall abutting on an interior open space of any building.

2.34 **"Fitness Center"** means and includes the built up premises including toilet facilities provided in the building including gymnasium for the benefit of its inmates and for the purpose of fitness, physical exercises, yoga, reading and such other activities as may be

permitted by SPA of JNPT SEZ from time to time.

2.35 **"Floor"** means the lower surface in a storey on which one normally walks in a building and does not include a mezzanine floor. The floor at ground level with a direct access to a street or open space shall be called the ground floor; the floor above it shall be termed as floor 1, with the next higher floor being termed as floor 2, and so on upwards.

2.36 **"Floor Space Index (FSI)** means the quotient obtained by dividing the total built-up area on all floors, excluding areas specifically exempted under these Regulations, to the total area of the plot viz.

$$\text{FSI} = \frac{\text{Total Built-up area on all floors}}{\text{Plot area}}$$

2.37 **"Footing"** means a foundation unit constructed in brick work, stone masonry or concrete under the base of a wall or column for the purpose of distributing the load over a large area.

2.38 **"Foundation"** means that part of the structure which is in direct contact with and is transmitting loads to the ground.

2.39 **"Front"** means the space between the boundary line of a plot abutting the means of access/road/street and the building line. Plots facing two or more means of accesses/roads/streets shall be deemed to front on all such means of access/roads/streets with accesses/roads/streets having more width shall be considered as main frontage for deciding side and rear margins.

2.40 **"Gallery"** means an intermediate floor or platform projecting from a wall of an auditorium or a hall, providing extra floor area, and/or additional seating accommodation.

2.41 **"Garage-Private"** means a building or portion thereof having a roof and walls on three sides, designed and used for parking of motor driven or other vehicles within a project. A private garage is not operated for gain and not designed or used for repairing, servicing, hiring, selling etc. of such vehicles. It does not include an unenclosed or uncovered parking space such as open parking areas**.**

2.42 **"Garage-Public"** means a building or portion thereof designed as a garage operated for gain, and used for repairing, servicing, hiring, selling or storing or parking of motor driven or other vehicles.

2.43 **"Grantor"** In respect of "Notified Area" means JNPT, where JNPT has executed the Agreement to Lease or License or Lease Deed in favor of its Allottee.

2.44 **"Ground Level"** means the average level of ground in a plot (site).

2.45 **"Habitable room"** means a room occupied or designed for occupancy for human habitation and uses incidental thereto, including a kitchen if used as a living room, but excluding a bath-room, water closet compartment, laundry, serving and storing pantry, corridor, cellar, attic, store-room, Pooja-room and spaces not frequently used.

2.46 **"Height of a building"** means the vertical distance measured, in the case of flat roofs, from the average level of the ground around and contiguous to the building or as decided by the Authority to the terrace of last livable floor of the building adjacent to the external walls; and in the case of pitched roofs, up to the point where the external surface of the outer wall intersects the finished surface of the sloping roof, and, in the case of gables facing the road, the mid-point between the eaves level and the ridge. Architectural features serving no other function except that of decoration, Staircase Cabin, lift machine room, water tank, parapet shall be excluded for the purpose of measuring heights.

2.47 **"Height of a room"** means the vertical distance measured from the finished floor surface to the finished ceiling/soffit of slab. The height of a room with a pitched roof means height between the finished floor surface and an average of the levels of the bottom of the eves and the bottom of the ridge.

2.48 **"Hoarding"** means any surface or structure erected on ground or any portion of roof of a building or on or above the parapet, with characters, letters or illustrations applied thereto and displayed in any manner whatsoever out of doors for purpose of advertising or to give information regarding or to attract the public to any place, person, public performance, article of merchandise whatsoever.

2.49 **"JNPT" (Jawaharlal Nehru Port Trust)** means the Chairman or any officer of Jawaharlal Nehru Port Trust duly authorized by him.

2.50 **"JNPT- SEZ Notified Area"** means the SEZ area notified by the Maharashtra Government by its Notification no. TPS -1717/612/CR0219/17/UD-12 dated 20th December, 2017.

2.51 **"Ledge"** or **"Taand"** means a shelf-like projection supported in any manner, except by vertical supports, within a room itself but without a projection of more than half a meter.

2.52 **"Lessor"** in respect of "Notified Area" means JNPT, where JNPT has executed the Agreement or Lease Deed in favor of its allottee.

2.53 **"Lessee"** in respect of the Notified Area means the allottee in favor of whom Lease of land has been granted/ agreed to be granted by JNPT.

2.54 **"Licensee"** In respect of "Notified Area" means the allottee in favor of whom JNPT has executed Agreement to Lease.

2.55 **"Lift"** means a mechanically guided car, platform or transport for persons and materials between two or more levels in a vertical or substantially vertical direction.

2.56 **"Loft"** means an intermediate floor between two floors, with a maximum height of 1.5 m. and a minimum headroom below of 2.4m in all rooms and 2.2m in case of Bathroom, water closet, corridors , without a permanent access and used for storage purpose

2.57 **Marginal Open Space / Set back:-**Minimum distance required to be left open to sky between the boundary of the building plot and the building line.

2.58 **"Mezzanine floor"** means an intermediate floor between two floors of any story, forming an integral part of floor below, overhanging or overlooking a floor beneath and not being a loft between the floor and the ceiling of any storey.

2.59 **"Multi-Storied Building"** or **"High-rise Building"** means a building above 15 m. of height and above the average surrounding ground level and contiguous to the building as prescribed by NBC 2016, as amended from time to time.

2.60 **"National Building Code of India 2016"** means the book containing Development control Rules, General building Requirements and Fire Prevention and Life Safety Measures to be implemented in the buildings, places, premises, workshops, warehouses and industries, published by the Bureau of Indian Standards, from time to time, with or without amendments.

2.61 **"Occupancy" or "Use"** means the principal occupancy or use for which a building or a part of it is used or intended to be used, including contingent subsidiary occupancies; mixed occupancy buildings being those in which more than one occupancy are present in different portions of the buildings.

2.62 **"Open Space"** means an area forming an integral part of a land left permanently open to the sky.

2.63 "**Parapet"** means a low wall or railing built along with the edge of roof or a floor.

2.64 **"Parking space"** means an enclosed or unenclosed covered or open area sufficient in size to park vehicles. Parking spaces shall be served by a driveway connecting them with a street or alley and permitting ingress or egress of vehicles.

2.65 **"Plinth"** means the portion of a structure between the surface of the surrounding ground and surface of the floor immediately above the ground.

2.66 **"Plinth area"** means the built-up covered area measured at the floor level of the basement or of any storey whichever is larger.

2.67 **"Plot"** means a portion of land held in one ownership and numbered and shown as one plot enclosed by definite boundaries.

2.68 **"Plumbing Engineer"** means a person having Diploma in civil engineering or an equivalent qualification as approved by AICTE, a certificate of plumbing or in sanitary engineering recognized by the IEI or AICTE and a certification to the effect that he has a minimum of 3 years' experience.

2.69 **"Podium"** means a floor of a building extending beyond building line/s and used for parking, fire and building services/ utilities and incidental purposes, as specified in these regulations.

2.70 **"Porch"** means a covered surface supported on pillars with wall only on one side, for the purpose of a pedestrian or a Vehicular approach to building.

2.71 **"Registered Architect"** means a qualified architect who is duly registered and possessing valid membership with the Council of Architecture under the Practicing Architects Act, 1972.

2.72 **"Registered Structural Engineer"** means a qualified Civil Engineer who is duly registered and a valid member of The Institutions of Engineers (India) with minimum five years of experience in structural design (in case of persons holding post graduate qualification experience required will be three years).

2.73 **"Road/Street"** means any highway, street, lane, pathway, alley, stairway, passage-way, carriageway, footway, square, place or bridge, over which the public have a right of passage, whether existing or proposed and includes all bunds channels, ditches, storm-water drains, service corridors for Sewage lines, Nallahs, Electric Lines, culverts, sidewalks, traffic islands, road-side trees and hedges, retaining walls, fences, barriers and railings, etc.

2.74 **"Road/Street-level or grade"** means the officially established elevation or grade of the center line of the street upon which a plot fronts, and if there is no officially established grade, the existing grade of the street at its mid-point.

2.75 **"Road/Street line"** means the line defining the side limits of a road/street.

2.76 **"Road width"** or **"Width of road/street"** means the whole extent of space within the boundaries of a road measured at right angles to the course or intended course of direction of such road.

2.77 **"SPA of JNPT SEZ"** means the Chairman Jawaharlal Nehru Port Trust or any other officer/officers duly authorized by him/her to perform any of the duties and functions under these Regulations.

2.78 **"Service Floor"** means a non-habitable floor provided for facilitating maintenance and/or termination/diversion of services like water supply, sewerage disposal system drainage, electricity supply, telecommunication lines and accommodating mechanical/electrical devices, apparatus like air handling units, air conditioning ducts etc.

2.79 **"Service road"** means a road/lane provided at the front, rear or side of a plot for service purpose.

2.80 **"Special building"** means-

i an industrial building;
ii a hazardous building;
iv a building of a wholesale establishment;
v a warehouse, FTWZ, Data Centers
vi logistic parks
vii assembly and institutional buildings
viii High rise buildings

2.81 **"SEZ Act"** means the Special Economic Zone Act, 2005, enacted by the Central Government as amended from time to time and rules framed under the act.

2.82 **"Special Economic Zone"** means geographical area notified as Special Economic Zone by Govt. of India under the SEZ Act, 2005.

2.83 **"Special Planning Authority (SPA)"** means the SPA of JNPT SEZ appointed by the state Government as Special Planning Authority for JNPT SEZ notified area.

2.84 **"Stair-cover"** means a structure with a covering roof over a staircase and its landing built to enclose only the stairs for the purpose of providing protection from the weather, and not used for human habitation.

2.85 **Stilts or Stilt Floor: -** Stilts or stilt floor means portion of a building above ground level consisting of structural column supporting the super structure with at least two sides open for the purpose of parking vehicles, scooters, cycles, etc. and other services as may be permitted under these regulations.

2.86 **"Storey"** means the portion of a building included between the surface of any floor and the surface of the floor next above it, or if there be no floor above it, then the space between any floor and the ceiling next above it.

2.87 **"Terrace"** means an open-to-sky flat roof of a building or part of a building, provided with a parapet for safety and without any cantilevered portion.

2.88 **"Theatre"** means a place of public entertainment for the purpose of exhibition of motion pictures and/or dramas and other social or cultural programs.

2.89 **"Tower-like-structure"** means a structure in which the height of the tower-like- portion is at least twice the width of the broader base.

2.90 **"Unauthorized developments"** means the development done or undertaken or in progress without prior approval of SPA of JNPT SEZ.

-

2.91 **"Unsafe Building"** means building which is structurally and constructionally unsafe or insanitary or not provided with adequate means of egress or which constitutes a fire hazard or is otherwise dangerous to human life or which in relation to existing use constitutes a hazard to safety or health or public welfare, by reason of inadequate maintenance, or dilapidation or abandonment.

2.92 **"Veranda"** means a covered area with at least one side open to the outside with the exception of 1m high parapet on the upper floors to be provided on the open side

2.93 **"Water closet (W.C.)"** means a privy with an arrangement for flushing the pan with water, but does not include a bathroom

2.94 **"Water course"** means a natural channel or an artificial channel formed by training or diversion of a natural channel meant for carrying storm and waste water.

2.95 **"Wholesale establishment"** means an establishment wholly or partly engaged in wholesale trade and manufacturer wholesale outlets, including related storage facilities, warehouses and establishments engaged in truck transport, including truck transport booking agencies.

2.96 **"Window"** means an opening, other than a door, to the outside of a building, which provides all or part of the required natural light. Ventilation or both to an interior space**.**

2.97 **"Zones"** means the zone or area that has been designated for specific use of land in the Development proposals.

3 Procedure for Securing Development Permission

3.1 Necessity of Obtaining Development Permission

Subject to the provisions of these DCPR, no person shall erect or re-erect a building or alter any building or carry out any development or redevelopment including temporary construction, on any plot or land or cause the same to be done without obtaining prior development permission from SPA of JNPT SEZ.

3.2 Application for Development Permission

Subject to the provision of these DCPR, any person intending to carry out any development on any land shall make an application in writing to SPA of JNPT SEZ in prescribed Form No.1 enclosed in the **Appendix VIII**.

3.3 Particulars and Documents to be submitted along with Application

The following particulars and documents shall be submitted along with the application viz.

a. Copy of letter of allotment from JNPT
b. Copy of lease Deed/ Agreement to Lease - Ownership Title
c. Copy Measurement plan attached to possession receipt
d. Clearance Certificate of Tax arrears.
e. Latest Copy of valid registration of Architect with Council of Architecture

f. A site plan (in quadruplicate) of the area proposed to be developed to a scale of 1:500 showing the following details wherever applicable.

i) The boundaries of the plot.

ii) The position of plot in relation to neighboring street.

iii) The name of the streets in which the plot is situated.

iv) All the existing buildings and other development standing on over or under the site.

v) The position of building and of all other buildings which the applicant intends to erect.

vi) The means of access from the street to the building or the site and all other buildings which the applicant intends to erect.

vii) Marginal Open space to be left around the buildings to secure free circulation of air, admission of light and access for scavenging purposes.

viii) The width of the street (if any) in front and of the street at the side or rear of the building.

ix) The direction of north point relative to the plan of the buildings.

x) Any physical features such as trees, wells, drains, etc.

g. **Detailed Plan (Building and Service Plans)** (in quadruplicate) showing the plans, sections and elevations of the proposed development work to a scale 1:100 showing the following details wherever applicable:

i) Floor plans of all the floors (including with the service floors) together with the covered area, clearly indicating the size and spacing of all framing members and sizes of rooms and the position of staircases, ramps and lift-wells including escalator spaces.

ii) The use of all parts of the building.

iii) Sizes of footings, thickness of basement walls, wall construction, floor slabs and roof slabs with their materials. The sections shall indicate the height of building and height of rooms and also the height of the parapet and the drainage and slope of the roof. At least one section should be taken through the staircase.

iv) The building elevations from all the streets.(minimum 2 sections)

v) Details of service privy, if any.

vi) Terrace plan indicating the drainage and slope or the roof.

vii) The north point relative to the plans.

viii) All structural calculations with necessary drawings.

ix) All plumbing services with necessary details.

x) Rain Water Harvesting plan

xi) All provisions related to Active and Passive Fire Protection requirements adhering to Part IV of National Building Code 2016 i.e. Fire & Life Safety.

h. **Landscape Plan** (in quadruplicate) to a scale of 1:250 showing various landscape features such as trees, hedges, paved areas, etc. The plan shall Show, in particular, the type and number of existing trees, the trees to be felled, the trees to be transplanted and

the proposal for planting of new trees.

i. **Rain Water Harvesting Plans** (in quadruplicate) showing the arrangement of Rain Water Harvesting, (**Appendix VI**)

j. Plan showing arrangements of Physically Handicapped (**Appendix V**)

k. Plan Showing arrangements of Solar energy assisted system (**Appendix VII**)

l. **Specifications**: Specifications, both general and detail, giving type and grade of materials to be used for development.

m. **Certificate of Supervision:** Certificate in the prescribed form (Form 4 and Form 7 in the **Appendix VIII**) by the Registered Architect and Structural Engineer undertaking the supervision and any other consultant.

n. All the drawings attached in soft copies of prescribed formats and scanned copies of all the attached documents on pen-drive / email.

3.4 Notations to be followed for Preparation of Plans

a. The following notations shall be used for plans referred to in regulation 3.3 above.

Table 1 Notations for Preparation of Plans

Sr. No.	Item	Site Plan	Bldg. Plan
1.	Plot Line	Thick Black	Thick Black
2.	Existing Street	Green	-
3.	Future Street, if any	Green dotted	-
4.	Permissible building Lines	Thick dotted	-
5.	Open spaces	No colour	No colour
6.	Existing work	Blue	Blue
7.	Work proposed to be demolished	Yellow hatched	Yellow hatched
8.	Proposed work	Red	Red
9.	Drainage& Sewerage Work	Red dotted	Red dotted
10.	Water Supply Work	Black dotted	Black dotted thin
11.	Recreation ground	Green Wash	--
12.	Gas Supply Line	Violet Dotted	Violet dotted Thin
13	Water Based Fire Protection Systems	Blue dotted	Blue dotted

b. Wherever applicable, schedules of rooms, apertures and floor areas shall be submitted along with the drawing in accordance with the forms enclosed in **Appendix VIII**.

c. All documents / schedules shall be in A4 or A3 size (folded to A4 size).

d. The plans referred to in 3.3 (in this DCR) above shall be on drawing sheets of any sizes mentioned in table 2 below.

Table 2 Drawing Sheet Sizes

Sr.No.	Designation	Trimmed Sized (mm)
1	A0	841 X 1189
2	A1	594 X 841

3.5 Permission Not Necessary: -

No permission shall be necessary for the following types of works:

i) The carrying out of works in compliance with any order or direction made by JNPT in exercise of its powers under any law for the time being in force.

ii) In case of land normally used for one purpose and occasionally used for any other purpose, such occasional use of land for that other purpose.

iii) provision of safety grills to window/ ventilator,

iv) Repairs to existing consumer/ distribution/ receiving substation of the electric supply company. However, no addition/ alteration shall be permissible without the approval of the JNPT.

v) installation of solar panels having base of solar panel at height 1.8m from terrace, ensuring structural stability from the Licensed Structural Engineer.

vi) providing internal lightweight partitions/cabins up to a height of 2.2m in the commercial building/ establishment with certificate of structural stability from the Licensed Structural Engineer

4 Development works to be Planned, Designed, Submitted and Supervised by Registered Professionals

4.1 Architect

The plans, specifications and notifications referred to in 3.3 and 3.4 above shall be prepared and duly certified by the Registered Architect.

4.2 Structural Engineer

The plans showing structural details shall be prepared and duly certified by the Registered Structural Engineer.

In respect of structural stability of each development work, each applicant shall notify the name & address of the registered Structural Engineer in the enclosed Form and the Structural Engineer shall convey his acceptance as per Form 6 enclosed. The Structural Engineer shall submit form of supervision as per form No. 7 enclosed, & on completion of the development, the Structural Engineer shall issue a certificate of stability of the structure, as per Form No.17 enclosed (**Appendix VIII**).

4.3 Plumbing Engineer

The Plans showing plumbing arrangements shall be prepared and duly signed by the Plumbing Engineer possessing requisite qualification as per Regulation No.2.68.

5 Development Permission Fees

5.1 Scrutiny Fees

A person/ company applying for permission to carry out any development on the land leased to him/ to the company shall with his application pay to SPA of JNPT SEZ the Scrutiny Fees at the rates notified below.

Table 3 Scale of Scrutiny Fees

Purpose	**Charges**	
	Industrial and Commercial Use	Residential and Institutional Use
a. To construct or reconstruct a building	Rs.16 per Sq.m or part thereof with a minimum of Rs.1000.	Rs.8 per Sq.m or part thereof with a minimum of Rs.500
b. For additional land/or alteration to the existing building where additional area is proposed	Rs.16 per Sq.m or part thereof with a minimum of Rs.1000.	Rs.8 per Sq.m or part thereof with a minimum of Rs.500
c. For alterations where no additional area is involved	Rs. 1000 per proposal	Rs. 500 per proposal
d. In case of amended plans for sanctioned proposal	With every amended proposal a fee of Rs 1000 where in no extra floor area is proposed, otherwise as per the additional area proposed Rs 16 per Sq.m. of part thereof with a minimum of Rs 1000	With every amended proposal a fee of Rs 500 where in no extra floor area is proposed, otherwise as per the additional area proposed Rs 8 per Sq.m. of part thereof with a minimum of Rs 500

Table 4: Scale of fees for Revalidation of C.C

Purpose	**Scale of Fees**
a. Where application for re-validation is submitted within one month of expiry of C.C.	1000/-
b. Where application for revalidation is submitted after expiry of one month but before expiry of 3 months of C.C.	1000/- + 1000/- (late fee) = 2000/-
c. Where application for revalidation is submitted after expiry of 3 months of valid date of C.C. but in any case not later than 3 years from the date of approval	2000/- + late fee at 400/- per month or part thereof to the period beyond 3 months of valid date.

Note:

- Scrutiny fees shall not be applicable to development undertaken by Central, State Government and JNPT.
- The Charitable Trust formed under Indian Trust Act shall receive 50% concession in amount of scrutiny fees.

5.2 Development Charge

As per the provision under section 124A to L of MR &TP Act (1966), any person/ company who intends to carry out any development or change any use of any land or building in the plot leased to him/ company, for which the development permission is required under these Regulations, then he/ company will have to pay the development charges at the rates notified by Chairman JNPT from time to time as permissible under the MR & TP Act (1966) and in accordance with the directives of state Govt for levy of such charges. However this provision will not be applicable for the development carried out by SPA of JNPT SEZ, Central and State Government.

In case of revised permission where no development is carried out in pursuance of the earlier permission, amount of difference of development charges, if any, shall be levied and recovered. In case of revised permission, where development is commenced in pursuance of earlier permission, development charges shall be levied on the land and built-up area, over and above the area covered in the earlier permission. No such charges shall be levied for renewal of permission.

5.3 Security Deposit

a) The applicant shall deposit and keep deposited an interest free amount as a security for the due performance of the conditions attached to the permission granted under the Commencement Certificate. The amount shall be deposited along with the application at the rate of Rs 20/- per Sq.m.
b) The security deposit shall be forfeited either in whole or in part at the absolute discretion of the SPA for breach of any of the provisions of these regulations and conditions

attached to the permission conveyed by the Commencement Certificate. Such forfeiture shall be without prejudice to any other remedy or right of the SPA. In case of forfeiture of security deposit during the execution of work, the applicant must replenish the security deposit before carrying out any further works. However, this provision will not be applicable for the development carried out by the SPA.

c) The security deposit will be refunded without any interest after the applicant obtains occupancy certificate for the entire development work for which the development permission was granted. The original challan shall be submitted by the applicant to the Chairman JNPT to process the claim.

6 Decision of the SPA of JNPT SEZ

On receipt of the notice/ application for development permission, SPA of JNPT SEZ may either sanction or refuse the plans or may sanction them with such modifications or directions as it may deem necessary after having recovered the necessary charges and thereupon shall communicate its decision to the person for grant or refusal of permission giving the notice in the prescribed form 8 and Form 10 respectively in the **Appendix VIII**.

7 Deviations during Construction

If during the construction of a building, any departure of a Substantial nature from the sanctioned plans is intended by way of internal or external additions, which violate any provisions regarding general building requirements, structural stability and fire safety requirements of the bye-laws, sanction of the Chairman, JNPT shall be obtained. A Revised plan showing the deviations shall be submitted and the procedure laid down for the original plans hereto before shall apply to all such amended plans.

8 Development undertaken on behalf of Government

As per the provision of Section 58 of the Act the Officer-in-Charge of any Government Department or Office or Authority shall inform in writing to JNPT of the intention to carry out development of any land for its purpose along with the following documents and plans.

a. A site plan (in quadruplicate) of the area proposed to be developed to a scale of 1:500

b. Detailed Plan (in quadruplicate) showing the plans, sections and elevations of the proposed development work to a scale of 1:100.

c. In the case of a layout of land or plot:

   i A site plan (in quadruplicate) drawn to a scale of 1:1500 showing the surrounding land and existing access to the land included in the layout.

   ii. A plan (in quadruplicate) drawn to a scale of 1:500 showing:

   - Sub-divisions of the land or plot with dimensions and area of each of the proposed sub-divisions and its use according to prescribed regulations;
   - Width of the proposed streets and

- Dimensions and areas of open space provided in the layout for the purpose of garden or recreation or like purposes.

9 Permission for Temporary Construction

The SPA of JNPT SEZ may grant permission for temporary construction for a period not exceeding 12 months in aggregate, unless otherwise specified by the SPA of JNPT SEZ.

These structures may be:

i. Structures for protection from the rain or covering of the terrace during the monsoon only.
ii. Pandals for ceremonies, religious functions, etc., Subject to approval of CFO (Chief Fire Officer) & FA (Fire Advisor).
iii. Temporary site office, labor camps, construction material storage godown and watchman chowkie/ booths within the site, upto the completion of project.
iv. Asphalt mixing / RMC (Ready Mix Concrete) plant
v. Milk Booth , ATM Centers and Telephone booths
vi. Temporary structures specified above shall be permitted by levying charges as specified by Chairman JNPT from time to time.

The above activities may be permitted subject to:

a. The condition that for such temporary construction fees shall be recovered at the rate of Rs.100/- per Sq.m of such covered area of temporary construction. Equal amounts as fees shall be payable as deposit, which will be refundable provided by the end of the stipulated period such temporary structures are removed without fail by the Allottee/ Licensee/ Lessee. Failure to remove such temporary sheds will be liable for forfeiture of the deposit and any such failure continuing beyond stipulated period shall be liable for imposition of penalty which will be 3 times the rate of Rs.100/- per Sq.m.
b. That all the permitted structures are not constructed in the clear width of mandatory open space around building.
c. Approval of structural engineer along with the certificate.
d. The proposed temporary activities and structures shall not encroach onto public circulation areas such as pedestrian walkways, covered walkways and roads.
e. The applicant/Allottee should ensure that noise and traffic disturbances to existing surrounding areas are kept to the minimum.
f. Provided that all temporary structures shall be demolished prior to the application of completion certificate by architect / lessee and all public properties that may have been affected due to such temporary structures shall be restored and the land cleared and levelled to the satisfaction of SPA JNPT

For all temporary works proposed to be executed by any applicant/ allottee, the following details shall be submitted to SPA JNPT:

a. Access to the plot, both permanent and any other access to the temporary works, if

proposed;

b. All existing buildings and physical features standing on, over or under the site;
c. Location, size and names of the proposed temporary works;
d. All dimensions of the proposed temporary works with details of all floors, setbacks and projections;
e. Construction method and construction material for all structures / works;
f. Water supply, power supply and drainage lines from source to discharge;
g. Any other as may be required by JNPT SPA.
h. Temporary structures are to be removed without fail by the Allottee/ Licensee/ Lessee/ applicant at the expiry of the duration.

10 Responsibilities of the Applicant

Neither the grant of Commencement Certificate nor the approval of the drawing and specifications nor inspections made by SPA of JNPT SEZ during the carrying out of development shall in any way relieve the applicant of his responsibility for carrying out the development in accordance with the requirements of these regulations.

The Applicant shall:

a. Permit authorized officers of SPA of JNPT SEZ to enter the plot for which the Commencement Certificate has been granted for carrying out development, at any reasonable time for the purpose of enforcing these regulations.

b. Obtain, where applicable, from SPA of JNPT SEZ permission relating to building, zoning, grades, sewers, water mains, plumbing, gas pipeline, advertisements signs, street occupancy, electricity, highways and all other permits required in connection with the carrying out the development.

c. Give notice to SPA of JNPT SEZ of the intention to commence the carrying out of development. (Form No.11).

d. Give written notice to JNPT on completion up to the plinth level and obtain plinth completion certificate before commencement of the further work. (Form No.12).

e. Give written notice to SPA of JNPT SEZ regarding completion of the development in Form No. 14 enclosed in the **Appendix VIII**, duly signed by the Registered Architect.

f. Obtain occupancy certificate from SPA of JNPT SEZ prior to any occupancy or use of the development so completed (Form No. 15).

g. Keep available for inspection, during the carrying out of development and for such a period thereafter as required by SPA of JNPT SEZ, the records of the tests which are made on any material to ensure conformity with the requirements of these regulations.

h. Keep pasted in a conspicuous place on the property in respect of which the permission to develop is granted, a copy of the Commencement Certificate.

i. Keep during carrying out of development a copy of the approved plans on the premises where the development is permitted to be carried out.

j. The applicant shall submit a soft copy of all the sanctioned plans and as built plans in compatible Auto Cad Format before issue of the commencement certificate and the occupancy certificate respectively.

k. Install a `Display Board' at the conspicuous place on site indicating: -

i) Name & address of owner /developer/Lessee, architect, structural engineer and contractor.

ii) Plot number, sector number, village name, street name

iii) Order number and date of development permission.

iv) FSI/Built-up area, no. of buildings and floors permitted.

v) Address where copies of detailed approved plans shall be available for inspection.

l. Give written notice to the Planning Authority in case of termination of services of a Technical professional engaged by him.

11 Inspection

11.1 Inspection at various stages –

SPA of JNPT SEZ may at any time during erection of building or execution of any work or development make an inspection thereof without giving previous notice of his intention to do so.

11.2 Unauthorized Development

In case of unauthorized development, i.e. any development carried out without necessary permission of SPA of JNPT SEZ or 'No Objection Certificate' from a competent authority, The Chairman JNPT may, under sections 52 to 57 of the M.R. & T.P. Act 1966, shall take suitable action which may include demolition of unauthorized works and recovery of the expenses for the same. Take suitable action against Licensed Technical personnel or the architect concerned.

11.3 Suspension Of development permission

In addition to the provisions of section 51 of the Act SPA of JNPT may revoke or suspend any permission issued under these Regulations, wherever there has been any false statement or any misrepresentation of any material fact in the application on which the permission was based, in such a case the whole work shall be treated as unauthorized. In the case of revocation of permission based on false statement or any misrepresentation of any material fact in the application no compensation of any form shall be payable.

11.4 Inspection by Fire Officer

The Development Permission will be issued after obtaining provisional Fire NOC from the Chief Fire Officer. For all high rise buildings, and special buildings, works shall be subjected to inspection by the Chief Fire Officer as per Regulation 39 of these regulations and the occupancy certificate shall be issued only after clearance by the said Chief Fire Officer.

11.5 Unsafe Buildings

All unsafe buildings shall be considered to constitute a danger to public safety, hygiene and sanitation and shall be restored by repairs or demolished or dealt with as otherwise directed by The Chairman JNPT shall be final in this regard.

i. Notice to Occupier: A building, which in the opinion of The Chairman JNPT shall serve or with such notice to the lessee/occupier(s) of building which involves imminent danger to human life or health stating the defects thereof. This shall require the lessee/occupier(s), within a stated time, either to complete specified repairs or improvements or to demolish and remove the building or portion thereof.

ii. Examination of Unsafe Buildings: The Authority shall examine or cause to be examined every building is reported to be unsafe or damaged and shall make a written record of such examination. A structural audit report recommending the alterations to be made to the affected structures shall be submitted to the concerned authority.

iii. Disregard of Notice: In case the lessee/occupier(s) fails, neglect, or refuses to comply with the notice to repair or to demolish the said building or portion thereof, JNPT SEZ shall cause the danger to be removed whether by demolition or repair of the building or portion thereof or otherwise. For this purpose. SPA may at once enter such structure or land on which it stand, or abutting land or structure with such assistance and at such cost as deemed necessary.

iv. Costs incurred under (i**i**i) above shall be charged to the lessee or occupier of the premises involved. Such costs shall be charged on the premises in respect of which or for the benefit of which the same have been incurred.

v. The Special Planning Authority / the Chairman may also get the adjacent structure vacated and protect the public by an appropriate fence or such other means as may be necessary.

12 Occupancy Certificate

Every owner carrying out development shall, within one month from completion / part completion of such development, give a written notice in the prescribed Form-14 given in **Appendix VIII** along with a structural stability certificate as given in Form-17 as on the day of completion of work, to the Authority through the Architect /structural engineer regarding completion of permitted development. The Authority or its technical representative may inspect the work jointly with the structural engineer or architect after the receipt of such notice and either accept or refuse to accept the Completion Certificate. On acceptance, further proceedings regarding issue of Occupancy Certificate shall start.

12.1 Grant of Occupancy Certificate

The SPA of JNPT SEZ shall after the acceptance of completion certificate required under regulation 10 (e) communicate its decision about the grant of occupancy certificate indicated in regulation 10 (f) and fulfilment of condition specified in Regulation 10 (k). No applicant shall occupy any structure or building without obtaining occupancy certificate from the Authority

12.2 Occupancy for a part of Building

Upon the request of the Applicant, SPA of JNPT SEZ may issue an occupancy certificate for a part of the building before completion of the entire work as per development permission, provided, sufficient precautionary measures are taken by the Applicant to ensure public safety and health safety. Provided further that the part of the building for which occupancy certificate is applied for, shall be functionally complete and conform to all requirements of these Regulations. This certificate may be granted by SPA of JNPT SEZ subject to the condition that the Applicant indemnifies the Authority, on stamp paper of such value as decided by SPA of JNPT SEZ as per the Proforma given in **Appendix VIII** (Form No.16).

13 Structural Safety of Buildings

Lessee shall be requested to submit the safety audit report of building on or before completion of 10 years duly authorized by Architect and Structural Engineer having authorized license, subject to following conditions:

i. If the building/ structure is found to be unsafe as per Regulation No. 2.91,
ii. on or before completion of 10 years from the date of issue of completion certificate,
iii. as demanded by the SPA of JNPT SEZ from time to time

14 Clearances from other Authorities

Specific approvals/clearances shall be obtained from various competent authorities from whom the clearances are required to be sought, like Development Commissioner SEZ, Maharashtra Pollution Control Board, Director of Industries, Chief Controller of Explosives, Inspectorate of Boilers and Smoke Nuisance, electrical distributor licensers regarding requirements of electrical transforming stations, Civil Aviation Department, necessary environmental clearances from the competent authority, etc. as per the provisions of various acts as may be applicable and the same shall be submitted to SPA of JNPT SEZ at the time of obtaining development permission.

15 Discretionary Powers

a) "In specific cases, where clearly demonstrable hardship is caused, the Chairman may for reasons to be recorded in writing by special permission, permit any of the dimensions prescribed in these rules to be modified except those relating to Floor Space Indices front margin parking requirements unless otherwise permitted under these rules, provided that the relaxation will not affect the health, safety fire safety, structural safety & public safety of the in habitants of the buildings and the neighbourhood"
b) **Power to Prescribe Proforma-** The Chairman JNPT shall have power to prescribe Form/Proforma and/or make amendments in the contents of such Form/ Proforma, in the general procedure for grant of development permission and part/full occupancy certificate.

PART II - DEVELOPMENT CONTROL AND PROMOTION REGULATIONS

A - MACRO CONTROL

16 Classifications of Zones and permissible land uses

The SEZ consists of four zones and the broad description is listed in the Table 5 below

Table 5: Zones and Broad Description

Zone	Broad Description
Processing	Processing zone includes industrial units, units for warehousing, FTWZ, IT, ITES, Data Centres, supporting infrastructure facilities and utility services, lower order commercial i.e. Convenience Shops, hotels, banks, administrative buildings, Govt/Semi Govt. offices.
Amenity	Amenity zone includes health care facilities, Govt/Semi Govt. offices, utility services, lower order commercial i.e. Convenience Shops, hotels, banks, Training Centers, administration buildings.
Transportation	Transportation zone includes roads, rotaries, footpaths, bridges, parking areas, logistics, transport terminus and supporting infrastructure facilities and utility Services.
Green Zone	Green Zone includes open spaces, green belts, natural drains, water bodies, landscaped areas, supporting infrastructure facilities and utility services

The uses permitted in the respective zones are marked (□) in table 6 below.

Table 6 Uses Permitted in Respective Zones

Sr no	TYPE	USE	Permissibility of uses within zones			
			Processing	Amenity	Transportation	Green
1		Hotel/ Rest room /Hostel/	✓	✓	✓	

	Short term accommodation	Club Houses or Gymkhanas	✓	✓		✓
		Dormitories	✓	✓	✓	
		Day Care Baby Creche	✓	✓		
2	**Green**	landscaping and horticulture	✓	✓	✓	✓
		Parks, Garden , open spaces, Playground, green belt, nursery, open air theatre, amphitheatre and swimming pool.	✓	✓		✓
3	**Health**	Primary Health Care Unit , Clinic, Hospital , dispensary and Casualty/Emergency Ward	✓	✓		
		First Aid post	✓	✓	✓	
4	**Electricity**	Electricity distribution/ receiving stations/distribution sub stations/ Energy Power Generator Supply Units, D.G Units	✓	✓	✓	✓
		Solar and Wind Energy Units	✓	✓	✓	✓
5	**Water and Sewage**	Pumping station, sewage disposal work, water supply installation & ancillary structures (STP, WTP, ESR, GSR, Septic Tanks, CETP, ETP etc.), Rain Water Harvesting Structure	✓	✓	✓	✓
6	**Public sanitation**	Public toilet, common Taps	✓	✓	✓	✓
7	**SWM**	Collection Waste Bins and Transfer Stations	✓	✓	✓	✓
		Solid waste disposal Methods (Organic waste), Composting Plants	✓	✓	✓	✓
		Solid waste disposal Methods (Inorganic waste), Incinerators.	✓	✓	✓	
	Other Services and Utilities	Telecom, Gas and Petroleum pipelines with a necessary sub stations of appropriate capacity, Optic Fibre Cables, Mobile Towers, and communication Tower.	✓	✓	✓	✓
8	**Fire**	Fire Station, Fire Post	✓	✓	✓	
9	**Institutional**	Govt/ Semi-Govt/SPA offices (Police Station, telephone exchange, sub offices of electric	✓	✓	✓	

		supply company, Post office, customer care Centers.)				
10	**Commercial**	Banks	✓	✓		
		ATM	✓	✓	✓	
		Departmental Stores	✓	✓		
		Convenience Shops /Lower order Commercial (Photo-copying, shoe repair, Cleaning and pressing establishments for clothes, Restaurants, eating houses, cafeteria, ice-cream and milk parlours)	✓	✓	✓	
		Business Offices, Travel agencies, ticket booking and selling agencies, Florists, Bakery shops, Café. etc	✓	✓		
		Vehicles repair/ servicing garages	✓	✓	✓	
		Retail trade and shops/stores or shops for conduct of retail business	✓	✓		
		Filling stations of petrol, diesel, compressed natural gas or any other motor vehicle fuel	✓	✓	✓	
11	**Assembly**	Libraries, reading halls, creative arts and other cultural activities	✓	✓		
		Places of worship, Religious buildings, Meditation Center.	✓	✓		
		Multipurpose Community halls, welfare centers,	✓	✓		
		exhibition halls ,Swimming Pool, Auditorium, clubs, assembly halls, Training Centre	✓	✓		
		Gymnasiums, open air theatre (amphitheatre) spiritual Center, meditation hall, yoga hall	✓	✓		✓
12	**Transport**	Bus stop / Bus Bay, taxi stands, auto- Rickshaw Stand			✓	
		Helipad	✓	✓	✓	
		Public parking areas including multi-storeyed parking	✓	✓	✓	
		canteen	✓	✓	✓	
		Rotaries, Weigh Bridge, construction for any mode of transportation	✓	✓	✓	

		Roads, Bridge culverts, , Walkways, Foot over Bridge, median Pathway, Footpath,	✓	✓	✓	✓
		Centralize Parking Plaza and Transport Terminal	✓	✓	✓	
		Entrance Gate Complex ,Security offices , watchman rooms, etc.		✓	✓	✓
13	**Storage**	Warehousing, Godowns, cargo yard, container Yards, FTWZ, Data Centers	✓			
14	**Industrial**	All Industries permitted under multi-product category in SEZ Act 2005 and rules amended from time to time subject to approval from the SEZ Development Commissioner.	✓			

Note: Any other use permissible in the processing zone as per the SEZ act and SEZ Development Commissioner as amended from time to time shall be permissible.

17 Requirement of site

17.1 Distance from Water Course

No development, whether by filling or otherwise, shall be carried out within 7M on either side of the bank of natural drain and 5M on either side of the bank of a channelized drain or within a distance as may be stipulated by SPA of JNPT SEZ. Provided that where a natural drain passes through a low lying land without any well-defined banks the applicant may be permitted by SPA of JNPT SEZ to restrict or direct the water courses to an alignment and cross section determined by SPA of JNPT SEZ.

17.2 Distance from Electric Lines

The distance of site / building from the electric line shall be as stipulated in clause No.6.4, Part III of the National Building Code of India, 2016.

No verandah, balcony or the like shall be allowed to be erected or re-erected or any additions or alterations made to a building on site within the distance quoted below in accordance with the current Indian Electricity Rules and its amendments from time to time between the building and any overhead electric supply line.

Table 7 Distance from electric lines

Sr. No.	Particulars of Electric Lines	Vertical distance	Horizontal distance in m
(a)	Low and medium voltage line and service lines.	2.5	1.2

(b)	High voltage lines up to and including 11,000 V.	3.7	1.2
(c)	High voltage lines above 11000 V and up to and including 33000 V	3.7	2.0
(d)	Extra high voltage lines beyond 33,000V.	3.7 (Plus 0.3 m for every additional 33,000 V or part thereof)	2.0 (Plus 0.3m for every additional 33,000 V or part thereof)

The minimum clearance specified in Table 7 above shall be measured from maximum sag for vertical clearance and from maximum deflection due to wind pressure for horizontal clearance.

18 Layout of Land

Development of land in the form of layout of more than one building shall be governed by the following regulations:

Whenever land is proposed to be developed for two or more buildings, a layout of the entire area showing proposed layout of buildings, with access roads, open spaces etc. shall be submitted for approval.

The provision of roads in any layout shall be as per Regulation No. 23 (b).

18.1 Intersection of Roads

At junctions of roads meeting at right angles, the rounding off at the intersection shall be done, unless otherwise directed by SPA of JNPT SEZ with the tangent length from the point of intersection to the curve being half the land width of road, across the direction of tangent

For junction of road meeting at less than 50°, the rounding off or cut, or similar treatment shall have tangent length of U and V from the inter sections point. The tangent length at obtuse angle junction shall be equal to half the width of the road, from which the vehicle enters. Provided, however, that the radius for the junction rounding shall not be less than 6 m.

19 Floor Space Index (FSI)

19.1 The maximum permissible FSI for SEZ including processing and other zones, shall be as follows;

Table 8 Permissible FSI

Sr.No.	Land Uses	Base FSI	Premium FSI	Max Permissible FSI
Processing				
1.	Industrial (All permissible industrial uses including Chemical, Flatted Factories and Service Industry)	**1.2**	**0.3**	**1.5**
2	Storage, FTWZ ,Warehousing, Data Centers	**1.2**	**0.3**	**1.5**
3	Information Technology, ITES, Biotechnology, Nanotechnology	**1.5**	**1.5**	**3.0**
4.	Amenity	**1.2**	**0.3**	**1.5**
5.	Commercial	**1.2**	**0.3**	**1.5**

Note:

i For the purpose of computation of FSI the gross plot area shall be considered for all land-uses.

ii In Recreational open spaces, the gross built-up area shall **not exceed 15%** of the area of the open space and **area of the plinth** of such structures shall be **restricted to 10%** of the area of the open spaces.

19.2 Additional FSI for Expansion of Existing Industries

In the case of existing building, JNPT may permit additional FSI upto complete consumption of FSI as prescribed in this DCPR to allow expansion of its production capacity, duly approved by the JNPT. Provided further that all the other provisions of these regulations including parking are complied with.

19.3 Additional FSI for Pharma Industry

JNPT may grant additional FSI to the pharma industries to the extent of 50% over and above the permissible Base FSI Provided that such grant of additional FSI shall be subject to payment of additional lease premium as prescribed by JNPT from time to time. Provided further that all the other provisions of these regulations including parking are complied with.

19.4 Additional FSI for IT / Bio-technology / Nanotechnology / Star Category Hotels/ Medical Institutions /Government and Semi Government*/Medical Institution*

JNPT may grant additional FSI to Information Technology (IT), Bio- technology (BT), Nanotechnology (NT), Star Category Residential Hotels, and Medical Institutions over and above the permissible Base FSI specified above, as under:

a) IT/ITES plots - 100% over & above the permissible Base FSI, duly approved by the Director of Industries/Development commissioner.

b) Biotechnology / Nanotechnology – 100% over & above permissible Base FSI.

c) Star Category Residential Hotels – 100% over & above permissible Base FSI

d) Medical Institutions – 100% additional FSI will be permissible

e) Government, Semi-Government and Public Sector undertaking – 50% over & above permissible Base FSI.

Provided that, the above additional FSI shall be granted subject to payment of additional premium as may be determined by JNPT from time to time. Provided further that all the other provisions of these Regulations including parking are complied with.

19.5 Exemption from computations of FSI

The following shall not be considered towards computation of FSI:

a. All covered areas used as parking in the same or separate multistoried building constructed exclusively for parking without servicing and repairing activity.
b. Facilities required for fire and life safety, as under
   i. Fire lifts excluding lobbies
   ii. lift lobbies in case of fire tower (fire tower as per NBC 2016)
   iii. Refuge areas
   iv. Fire control rooms
   v. Fire staircase & Lift lobbies as defined in NBC 2016 (mid landing and landing area)
c. A basement or cellar used as a parking space or Air-conditioning equipment and other machines used for services and utilities of the building
d. An area under a building constructed on a stilt which is used as parking space provided where there are no side walls of such a space.
e. Any floor area of a building which is used as parking space at one or more

levels.

f. Staircases upto minimum width of the staircase required and staircase lobby upto depth limited to the minimum required width permissible.
g. Lifts and lobbies in front of lifts to the extent of 1.5 times the depth of lift well and width equal to the width of lift well
h. Architectural feature not serving any purpose other than decoration.
i. Open Terrace
j. Areas covered under the construction space required for providing equipment / storage space required for provision of non-conventional energy sources, if provided in accordance with these regulations.
k. Electric cabin or sub-stations, Watchmen's Booth, Pump House Watchman cabin / Booth and watch towers.
l. Staircase room and/or lift rooms above the top-most storey or in the basement.
m. Chimneys and elevated tanks of dimensions as permissible under these Regulations.
n. Service Passages/corridors along the external face of the industrial buildings required for fire safety as per NBC 2016 and directed by the CFO from time to time.
o. Any antenna/communication tower used for telecom or IT purposes.
p. Any semi-permanent structure up to 20 Sq.m of built up area for installation of telephone connectors/concentrators in case of applicants who would provide suitable proof of being authorized by the Department of Telecommunications, Govt. of India, for setting up of cellular mobile telecommunication system.
q. Refuge Area as stipulated under Fire Protection Regulations in Part III, Regulation .No. 37.24 (after every 15m)
r. Refuse Chute.
s. One service floor with height below the soffit of a beam not exceeding 1.8m. Additional height may be permitted on prior approval from the Chairman JNPT, the reason for requirement of additional height shall be recorded in writing.
t. Area used for installations of Air Handling Unit (AHU).
u. Other ancillary structures/activities permitted in marginal open spaces, as specified in Clause No. 22.5 of these Regulations.
v. Lofts to the extent of the dimensions specified in these regulations.

20 Building Heights

The maximum permissible height of buildings shall be as stipulated by Chief Fire Officer, which in turn shall be governed by the availability and capacity of the local firefighting facility.

Staircase cover, lift machine room, water tank, parapet wall shall not be included in computation of the Building Height. If the entire building has stilt floor than the height of the building shall be computed exclusive of Stilt height.

21 Urban Design Controls

The nature of development within the SEZ is predominantly industrial. Guidelines will help coordinate following aspects together –

1) Site organization
2) Built-form and streetscape
3) Building Design
4) Parking and Vehicular Access
5) Utilities, Loading and storage
6) Signage and lighting

21.1 Site organization

1) Develop an integrated streetscape utilizing quality and varied built forms.
2) Buildings should have minimal setbacks from public streets and spaces to create a consistent street edge and to give a sense of enclosure, which enhances the pedestrian experience.
3) Loading areas and vehicle manoeuvring areas have a minimal visual impact on the street frontage.
4) The overall site design and built form of industrial and amenity buildings reflect view corridors to the site and potential focal points and gateway functions

21.2 Built Form and streetscape

1) The siting of buildings is to spatially define the street, provide high quality active frontages and provide opportunities for landscape planting in order to improve the visual quality of the streetscape.
2) Setbacks along major roads are encouraged to provide for street tree planting and sidewalks to create a boulevard style streetscape.
3) Built form should be designed to encourage active frontages along the public street, for example, locating building entrances towards the public street.
4) The compound wall of unit holder plots will be 2.00 metre high. The standard form and size of compound wall will be given to the unit holders by JNPT. The same has to be adhered by the unit holders.

5) Other components of streetscape to be provided and placed at appropriate locations without hindering pedestrian and vehicular movement. Benches, Bus stops, Traffic barrier, bollards, Road pavement, curb stones, Road Signs, Fire hydrants, street lights, traffic lights, refuge bins, Fountains, Public sculptures etc.

21.3 Building Design

1) Building facades are to be of a simple modern architectural style and include material types that reflect the industrial character of the street.
2) Encourage building design that provides a diverse and coherent streetscape.
3) All major rooftop or exposed structures including lift motor rooms, plant rooms, water Tanks, Cooling Towers etc., together with air conditioning, satellite dishes, ventilation and exhaust systems, should be suitably screened with parapet wall , grill and integrated with the building so that they are not visible from the street or road.

21.4 Parking and Vehicular Access

1) Parking within the front edge is discouraged. Preferably, parking should be located behind and/or at the side of the building.
2) Road delineators, Road studs, Roadside safety barriers, Pedestrian guardrails, Access control etc. to be appropriately located as per standards.
3) All parking bays, loading docks, driveways and vehicular turning areas are to be constructed and sealed with an all-weather pavement surface and are to be adequately drained.

21.5 Utilities, Loading and storage

1) Loading bays should not be the prominent feature of the building facade. Loading bays should be setback from the street to reduce their impact on the facade and the streetscape.
2) The garbage holding area facility is to be fully screened from public view and is to be located clear of all landscaped areas, driveways, turning areas, truck standing areas and car parking spaces. Screening may be in the form of mounding with supplementary landscaping or of masonry construction. Where the screening is proposed to be of masonry, the materials used are to co-ordinate with the materials used in the overall site development

21.6 Signage and lighting

1) Signs and lighting should form an integrated part of the streetscape, open spaces and building façade.

2) Signs should be limited in numbers to avoid cluttering, distraction and unnecessary repetition
3) Necessary signage, street name boards, shall be positioned at appropriate locations like intersections, entrance plaza, utility zone, open spaces and at various locations in each zone.
4) The level of finish and overall quality of materials used should convey a high-tech image and should be able to identify and communicate information for ease in navigation.
5) Huge bill boards for advertising should be discouraged.
6) Use of Monoliths, Finger posts, Gantry & Single post installation.
7) Unit holders will adhere to a standard signage design provided by JNPT for displaying company information at the entrance.
8) Appropriate lighting in all zones to ensure a safe and convenient experience through the site and the public street environment.

B - MICRO CONTROLS

22 Marginal Open Spaces around Buildings

22.1 The marginal open spaces shall be subject to the regulations regarding height of the building and the distance between the boundary of the plot and the building line as indicated in the Table 9 below:

Table 9 Marginal Open Spaces for plots

Sr. No.	Plot Area in Sq. m	Minimum Marginal Open Space on front side	Minimum Marginal Open Space on other sides
(1)	(2)	(3)	(4)
1.	Plots below 500 Sq.m	3 m	3 m
2.	Above 500 Sq. m area up to 800 Sq. m	4 m. or 1/3rd height of building whichever is more	3 m. or 1/3rd height of building whichever is More.
3.	Above 800 Sq.m to 1200 Sq. m	4 m. or 1/3rd height of building whichever is more	4 m. or 1/3rd height of building whichever is more
4.	Above 1200 Sq.m to 2500 Sq. m	5m. or 1/3rd height of building whichever is more	5 m. or 1/3rd height of building whichever is more
5.	Above 2500 Sq.m to 5000 Sq. m	9 m. or 1/3rd height of building whichever is more	6 m. or 1/3rd height of building whichever is more
6.	Above 5000 Sq.m	9 m. or 1/3rd height of building whichever is more	9 m. or 1/3rd height of building whichever is more

Note:

i) For heights above 36 m, the width of marginal open spaces around buildings shall be minimum 12m.

22.2 If any interior or exterior open space is intended to be used for the purpose of light and ventilation by more than one building belonging to the same Applicant, then the width of such marginal open space shall be the one

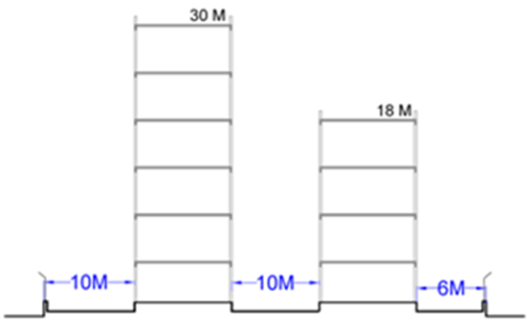

Illustration 1 Diagram showing Distance between two buildings

required for the tallest building as specified in Table 9 above. However, this distance shall be the clear distance without any projections like balcony etc.

22.3 Special Buildings

i. Institutional buildings: The minimum marginal open space, for plots below 1000 Sq.m front margin of 4.5m and other margins of 3.0 m shall be maintained and for plots above 1000 Sq.m, 6.0 m shall be maintained on all the sides.

ii. Assembly buildings such as Assembly Hall, etc., Minimum marginal distance from the road side shall be 9 m and 6 m from all other sides and shall be exclusive of parking spaces to be provided, as per these Regulations.

22.4 Projections in marginal open spaces

i. In the case of plots up to 500 Sq.m. in area, balconies, cupboard, chajjas, weather sheds, canopies cornices, sun breaker, revas projection, any ornamental features and such other features shall be permitted to project in the minimum marginal open space from building line as stipulated in Table 9 to the extent of 0.6m provided the clear height below such projections from ground level is minimum 2.1 m

ii. For plots above 500 Sq.m. in area Balconies, cupboard, Chajjas, Weather Sheds, Staircase Landing, Canopies cornices, sun breaker, revas projections, any ornamental features and such other features shall be permitted to project in the open space from building line to the extent of 1.5 m but the clear width of the open space shall in no case be less than 3 m for buildings up to 15 m in height, and 4.5 m for buildings above 15 m height.

22.5 Structures Permissible in Marginal Open Spaces

For plots up to 5000sqm area the following structures may be permitted in marginal open space provided that the clear width of open spaces shall in no case be less than as indicated below

I. For industrial sheds / buildings up to 6m height: 4.5m & 6.0m for heights more than 6m

II. For all other occupancies: 4.5 m up to 15m height & 6.0m for heights more than 15m

i. Canopy
ii. Open steps for plinth
iii. Suction tank & pump room
iv. Generator Set
v. Garbage chamber
vi. Vehicular ramp
vii. Open gantry for loading/ unloading in case of Engineering

industry

viii. Effluent Treatment Plant (ETP)
ix. Open Ramps up to Plinth
x. Meter Room / Electric Sub-station as per requirement of power supply company
xi. Open Transformers
xii. Landscaping features
xiii. Water bodies as landscape features
xiv. Telephone distribution equipment
xv. Fire Hydrants
xvi. Platform around tree up to max 2.0 m dia.
xvii. Fire Escape Staircase as per NBC 2016 as amended from time to time
xviii. Cooling Tower
xix. Loading/unloading Platform
xx. Fork lift
xxi. Security cabin
xxii. Toilet facility for Service Staff

Notes:

i) In case of industrial sheds up to 6m height where the depth of plot is not more than 30 m. the structures/activities permissible in marginal open spaces would be allowed only on one side which does not derive entry to the plot or building and in rear margins provided that a clear width of 1 m *for rear margin and 3m for side margin* is maintained between such structures and the plot boundary.

ii) A cantilevered, unsupported canopy not exceeding 5.5 m in length may be permitted in minimum marginal open space provided that the clear height below such canopy from ground level is minimum 5.5 m

iii) All the structures which are permissible in marginal open spaces shall be subject to clearance from the concerned Fire Officer of SPA of JNPT SEZ.

iv) Storage of hazardous materials shall not be permissible in the marginal open spaces. Storage of hazardous material in the open area of plot (excluding marginal open spaces) shall be subject to approval from Fire Officer of SPA of JNPT SEZ and/or other competent authorities.

23 Means of access and Internal Roads in Layout:

a) Means of access and internal roads in layouts shall be levelled, metalled, tarred, flagged, paved and sewered, drained, channeled, provided with lights and water supply line and with trees for shade to the satisfaction of The Chairman JNPT. They shall be free of encroachment by any structure or fixture that may reduce their width below the minimum required by Regulation 23(b) and shall be

maintained in condition considered satisfactory to The Chairman JNPT.

b) Minimum width of Internal Roads in Layout: Minimum width of layout roads shall not be less than the following:

Table 10 Minimum width of Road

Processing Area

Length of Road	Minimum width (Right of way)
Upto 100 m	12.00 m
100-500 m	15.00 m
Above 500 m	20.00 m or more as required by the projected traffic.

c) Access as well as entry to each site will be specified by SPA of JNPT.

d) Every site to have access free of encroachment: Every site proposed to be developed or redeveloped shall have access from a public street/ road as required in these regulations. Such access shall be kept free of encroachment.

e) High rise and Special Buildings: The Chairman JNPT may permit access to such buildings from any street not less than that specified in regulation 23 (b), each end of which shall join another street of equal or greater width.

f) The location of approaches to buildings, passenger drop offs, service areas, and loading/unloading bays shall be within the boundary of the Allotted Land.

g) Cul-de-sacs shall be provided with adequate turning space and drainage arrangements. Length of road ending in cul-de-sac may be limited to 250 m.

h) The Chairman JNPT shall have the right to specify the location of the access either for the approaches to the building or for the internal streets from public road.

i) The approach to the building and mandatory open space on its all sides, shall be as approved by the SPA, and the same shall be capable of taking the weight of fire engine, the said open space shall be kept free from obstructions except the permitted under these regulations and shall be motorable. No portion of any building or structure shall project over the entrance/exit point below a height of 4.5m from the point for fire-fighting.

24 Inner and Outer Chowks

The following regulations shall apply to buildings of all the land-uses:

1. Inner chowks shall be kept accessible at the ground level.
2. No dimension of an inner chowk on which doors and windows abut shall be less than 3 m
3. Inner chowk on which doors and windows abut shall have area at all levels of the chowk, of not less than the square of 1/5th height of the highest wall abutting the chowk. No room excluding a staircase, bathroom and WC shall be exclusively dependent for its light and ventilation on an inner chowk. If

any room abutting an inner or outer chowk is exclusively dependent upon such chowk for its light and ventilation the dimensions of the chowk shall be in accordance with Regulation 22, provided that when only bath rooms and water closets abut the chowk, chowks shall have a minimum dimension of 2.5m and may have any area for any height.

4. No length (as distinguished from its depth) of an outer chowk shall be less than 2 m

25 Room Sizes

The minimum sizes of habitable room, bathrooms and the WCs shall be as follows, for buildings of all land-uses:

Table 11 Size of habitable room, Bathrooms and WCs

Sr. No.	Particulars	Internal dimensions
1.	Habitable room	Min. area 9.5 Sq.m and Min. dimension 2.7 M
2.	Bathroom	1.2 M X 1.2 M
3.	Water Closet (WC)	0.9 M X 1.2 M
4.	Combined Toilet	1.2 M X 2.1 M

26 Height of Rooms

The minimum and maximum height of the habitable rooms shall be as given in table 12 here under:

Table 12 Height of Rooms

Sr. No	Occupancy		Minimum height (m.)	Maximum height (m.)
(1)	(2)		(3)	(4)
1.	Flat roof	(a) Any habitable room Including rooms in IT/BT unit	2.75	4.20
		(b) Air-conditioned habitable room Including rooms in IT/BT unit	2.40	4.20
		(c) Assembly halls, residential hotels, rooms in institutional, industrial, entrance halls, lobbies to assembly halls, Banquet halls, Atrium,	3.60	5.00

		Commercial/ Mercantile complexes, and sports/ clubs rooms		
2.	Pitched roof	Any habitable room	2.75 (average with 2.1 m at the lowest point)	4.2 (average with 3.2 m at the lowest point)

The above provisions are subject to the following:

i. The maximum height of room for Industrial or Warehouse godown/storage/ FTWZ shall be 18.0 m.

ii. The minimum clear head-way under any beam shall be 2.4 m in all occupancies, except those included in Sr. No. 1(c) in the Table 12 above, any height in excess of 4.2 m shall be deemed to have consumed an additional FSI of 50 per cent of the relevant floor area.

iii. In the case of the uses listed at 1 (c) above, minimum and maximum height shall be 3.6 m and 5.0 m respectively. Subject to the written permission of the Chairman JNPT, greater height may be permitted.

iv. The height of bathrooms, WCs and Store Rooms in buildings of all land-uses shall not be less than 2.2 m

v. Any telemetric equipment storage erection facility can have a height as required for effective functioning of that structure.

vi. AC plant room can have height as required for the installation and effective functioning of the plant.

27 Apertures for light and Ventilation

The following regulations shall apply to all rooms including bathroom, WC, store room in buildings of all land-uses:

a) All rooms shall be provided with one or more apertures such as windows, fanlights, skylights, louvered doors and the like opening directly on to the external air or on to a covered unenclosed balcony not more than 2m in width.

b) The total area of such apertures inclusive of frames shall not be less than 1/6th of the carpet area of the room the glazed portions of the apertures may be partly fixed. The area of such partly fixed portions shall not exceed 33% of the total area of apertures. No portion of a room shall be considered to be lighted, if it is more than 12 m away from the aperture directly lighting it.

c) In case of building in which any portion of a room is more than 7.5 m away from the aperture or where artificial ventilation is resorted to through air conditioning system, the illumination levels due to artificial lighting shall be as prescribed in the National Building Code Part VIII or any modifications thereof. In all such cases a detailed plan showing proposed illumination arrangement shall be submitted for approval.

d) For air conditioned premises the provisions as prescribed in Part VIII of National Building Code or any modifications thereof shall apply.

e) Artificial ventilation shaft- A bathroom, water closet, staircase or store may abut on the ventilation shaft, the size of which shall not be less than the values given below:-

Height of buildings in m.	Cross section of vent shaft Sq.m	Minimum width of shaft in m
Upto 12	2.8	1.2
Upto 18	4.0	1.5
Upto 24	5.4	1.8
Upto 30	8.0	2.4
Above 30	9.0	3.0

28 Balconies

The minimum clear width of balconies in buildings (of all the land-uses) shall be one meter (1 m), provided that the aforesaid width need not be insisted upon through the length, in case of semi-circular or any non-rectangular shaped balconies.

29 Loft and Mezzanine

29.1 Lofts

Table 13 Extent of Lofts

Sr. No.	Rooms over which Lofts permitted	Coverage (% to area of room below)
1.	Bathroom, water closet, corridor.	100
2.	Shops, Industrial, Warehousing, Office	33.33

i. Provided that lofts in commercial or industrial buildings shall be located at least 2 m away from the entrance

ii. Provided further that the clear head-room under a loft shall not be less than 2.4 m (2.2 m in case of Bathroom, water closet, corridors) and the above it shall not be more than 1.5 m.

29.2 Mezzanine

The following regulations shall apply to buildings of all the land-uses: A mezzanine floor shall be permitted within a room provided that the carpet area of such room is not less than 27 Sq.m and the area of the mezzanine floor does not exceed 30% of the carpet area of the room in which it is located. The height above and below the mezzanine floor shall not be less than 2.4 m.

30 Staircases

Minimum width of Common Stairways/ Corridors for various occupancies shall be as indicated in the Table 14 below:

Table 14 Minimum Width of Stairways and Corridors

Sr. No,	Type of occupancy	Minimum width of staircase/ stairway/ corridor (in meters)
(1)	(2)	(3)
1.	Assembly and Intuitional buildings	2.0
2.	Mercantile, business, Hotels, Industrial, storage, hazardous buildings	1.5
3.	All other buildings	1.5

i. The height of riser shall not exceed 19.0 cm and the width of tread without nosing shall be minimum 25 cm.
ii. The riser shall be limited to 12 per flight.
iii. In case of special buildings, the height of riser shall not exceed 15.0 cm and the width of tread without nosing shall be minimum 30 cm.
iv. Minimum Two staircases shall be provided for all special buildings.

31 Lifts

The following regulations shall apply to lifts in buildings of all land-uses without prejudice to the provision of Regulation No 39.7

i. If the height of building exceeds 15 m at least one lift shall be provided in the building.
ii. Where the height of a building exceeds 24 m at least two lifts shall be provided in the said building.

32 Basements

Area and Extent: The total area of basement may be in one level (multilevel basement shall not be permitted) and may extend beyond the building line below ground level provided the clear distance between the edge of the basement and plot boundary is kept as specified in Table 15 below. Provided further the top slab of the basement is designed as heavy duty slab capable of withstanding heavy firefighting equipment to the satisfaction of CFO.

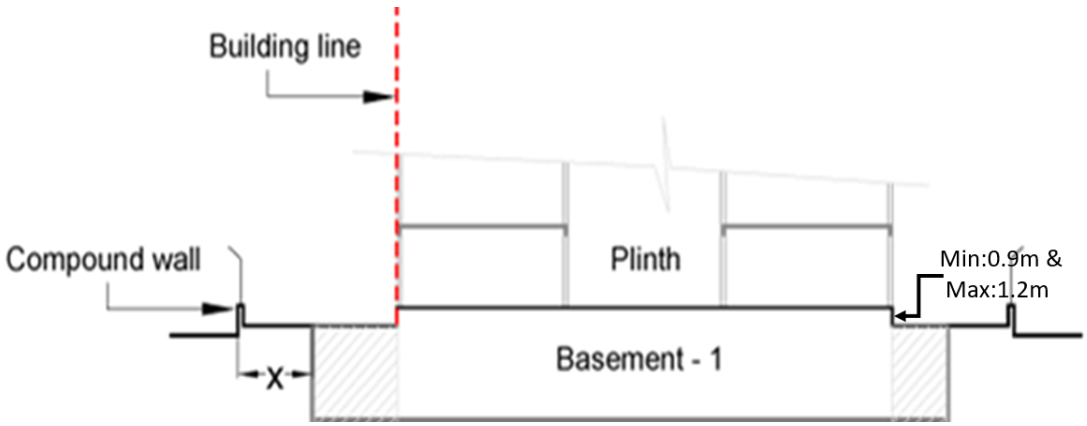

Illustration 2 Showing Extent of Basements

Table 15 Minimum clear widths from plot boundary to edge of basements

Area of Plot	Clear Widths (x)
For plots up to 2000Sq.m	3.0m
2001 Sq.m – 5000Sq.m	4.5m
5001Sq.m – 10000 Sq.m	6.0m
Above 10000 Sq.m	9.0m

i. Height: The height of the basement from the floor to the underside of the roof-slab or ceiling or under side of a beam when the basement has a beam, shall not be less than 2.4 m and maximum of 4.2 m. The Chairman JNPT may Permit Additional Height for reasons to be recorded in writing.

ii. The ceiling of basement immediately below ground floor shall be at least 0.9 m and not more than 1.2 m above the average surrounding ground level, the natural light and ventilation shall be provided along the building line as shown in the illustration 2 above. However, it does not apply to the mechanically ventilated basements. In such cases, basement may also be allowed flushing to the average ground level.

iii. Ramps :

a) For parking spaces in basements and upper floors, preferably two ramps shall be provided for plot up to 2000 Sq.m. For plots above 2000 Sq.m. It shall be mandatory to provide two separate ramps preferably at

opposite ends. The ramps shall have minimum width of 3.5 m. for one way ramp and 6.0 m for two ways ramp. Such ramps may be permitted in the side and rear marginal open spaces after leaving sufficient space for movement of firefighting Vehicles and subject to Regulation no 22.5.

b) Ramp slope shall be maximum 1 in 8.

c) After a 40m length of continuous Ramp a flat surface of minimum 6.0m length shall preferably be provided

iv. Adequate arrangement shall be made such that surface drainage does not enter the basement.

v. The walls and floor of the basement shall be water-tight and be so designed that the effect of the surrounding soil and moisture, if any, is taken into account in design and adequate damp proofing treatment is given; and

vi. The access to the basement shall be separate from the main and alternate staircase providing access and exit from higher floors. Where the staircase is continuous the same shall be of enclosed type serving as a fire separation from the basement floor and higher floors. Open ramps shall be permitted if they are constructed within the building line subject to the provision of (iv) above.

vii. Uses Permitted:

A basement may be put to the following uses only:-

a. Store rooms, bank lockers or safe-deposit vaults;
b. Air-conditioning equipment and other machines used for services and utilities of the building like water tank, pump room, locker room, telecommunication room, safety control room, Building Management System (BMS) room.
c. Parking spaces;
d. Electric sub-station (which will conform to required safety requirements), electric panel and meter room, D.G Set room as per NBC 2016. Electrical sub-stations, boiler rooms in basements shall comply with the provisions of the Indian Electricity Act / Rules.
e. Collection rooms for solid waste, Effluent treatment plant, suction tank
f. Time keeper office, changing room, driver rest room, staff dining and pantry, etc.
g. Uses strictly ancillary to principle use.

33 Podium

Podium for parking of vehicles may be permitted with following requirements/ conditions:

i. Height of podium shall be at least 2.4 m. from the floor to the soffit of beam.

ii. Podium shall not be provided in front setback space. Podium shall be allowed at

a distance of **6.00 m.** from the plot boundary

iii. Podium shall only be used for parking and it shall be designed to take load of fire engine.

iv. Podium shall be permissible for plots admeasuring 2000 Sq.m and above.

v. Podium shall be permissible for joining two or more separate buildings in a plot, buildings or wings of buildings subject to availability of manoeuvring space for Fire Engine. In such case the distance between two buildings/wings of the building shall be provided as otherwise required under these regulations.

vi. The consent from the Chief Fire Officer shall be necessary before permitting the aforesaid podium.

vii. For the plots having area 2000sqm or more, recreational open space may be permitted subject to provision of 1.2m parapet wall.

viii. Fire and building services/utilities in accordance with the NBC 2016 shall be permitted

ix. A podium if provided with ramp may be permitted in one or more levels, however the total height shall not exceed 30.0m above ground level.

x. In case the podium is not provided with ramp but provided with a car lift only the same may also be permitted in one or more levels, however the total height shall not exceed 9.0m above ground level.

xi. Podium if accessible to fire tender, shall so be designed so as to take the load of fire tender weighing up to 45t minimum or as per the requirement laid down by the fire department.

xii. If the podium is accessible to fire tender, minimum of 7.5m wide ramp shall be required for fire engine access with maximum slope of 1 in 10.

xiii. Requirements for the fire tender movement shall be in accordance to Part 3 of NBC 2016.

34 Overhead Tanks

Every overhead water storage tank shall be maintained in a perfectly mosquito-proof condition by providing a properly fitting hinged cover and every tank more than 1.5 m in height shall be provided with a permanently fixed iron ladder to enable inspection by anti-malaria staff. The clear height below the overhead tank i.e. from finished floor surface to the finished bottom surface of the overhead tank shall be less than 1.5 m.

35 Septic Tanks

35.1 Location and sub-soil dispersion system shall not be closer than 12 m to any source of drinking water, such as a well, to mitigate the possibility of bacterial

pollution of water supply. It shall also be as far removed from the nearest habitable building as economically feasible but not closer than 2 m to avoid damage to the structure.

35.2 Dimensions and Other features

a) Septic tanks shall have a minimum inner width of 75 cm, a minimum depth of 1 m. below the water level and a per capita minimum liquid capacity of 85 liters. The length of the tanks shall be at least twice the width.

b) Septic tanks may be constructed of brick work, stone masonry, concrete or other suitable material as approved by SPA of JNPT SEZ.

c) Under no circumstances, should effluent from a septic tank be allowed into an open channel drain or body of water without adequate treatment.

d) The minimum diameter of the pipe shall be 100 mm further, at junctions of pipes in manholes; the direction of flow from a branch connection should not make an angle exceeding 45° with the direction of flow in the main pipe.

e) The gradients of land-drains, under-drainage as well as the bottom of dispersion trenches and soak ways should be between 1:300 and 1:400.

f) Every septic tank shall be provided with a ventilating pipe of at least 50 mm diameter. The top of the pipe shall be provided with a suitable cage of mosquito-proof wire mesh. The ventilating pipe shall extend to a height which would cause no smell or nuisance to any building in the area. Generally, the ventilating pipe should extend to a height of about 2 m when the septic tank is at least 15 m away from the nearest building and to a height of 2 m above the top of the building when it is located closer than15 m

g) When the disposal of a septic tank effluent is to a seepage pit, the seepage pit may be of sectional dimension of 90 cm and not less than 100 cm in depth below the inner level of the inlet pipe. The pit may be lined with stone; brick and concrete blocks with dry open joint which should be backed with at least 7.5 cm of clean coarse aggregate. The lining above the inlet level should be finished with mortar. In the case of pits of large dimensions, the top portion may be narrowed to reduce the size of the R.C.C. cover slabs. When no lining is used, especially near trees, the entire pit should be filled with loose stones. A masonry ring should be constructed at the top of the pit to prevent damage by flooding of the pit by surface run off. The inlet pipe should be taken down to a depth of 90 cm from the top as an anti- mosquito measure.

h) When the disposal of septic tank effluent is to a dispersion trench, the dispersion trench shall be 50 to 100 cm wide excavated to a slight gradient and shall be provided with a layer of washed gravel or crushed stones 15 to 25 cm deep. Open joined pipes placed inside the trench shall be made of unglazed earthenware clay or concrete and shall have a minimum internal diameter of 75 to 100 mm each dispersion trench should not be longer than 30 m and trenches should not be placed

closer than 1.8 m to each other.

36 Car Parking and Loading & Unloading

a) Parking area for different vehicular modes and number of car spaces to be provided for various land-uses shall be governed by the following tables.

Table 16 Size of Parking for different Vehicular Modes

Sr. No.	Type of Mode	Size of Parking Bay
1.	Car	2.5 m x 5.0 m
2.	Scooter/ Two Wheeler	2.5 m x 1.2 m
3.	Truck	3.75 m x 10.0 m

Table 17 Parking requirement for various Land-uses/Buildings

SR.	LAND-USE	CAR SPACES
1.	Industrial	One space for every 200 Sq.m. of floor area upto 2000 Sq.m and or part thereof subject to minimum of two spaces and one space for every 500 Sq.m thereafter.
2.	Information Technology, Biotechnology & Nanotechnology	One space for every 100 Sq.m. of floor area or part thereof.
3.	Storage, Warehousing, FTWZ, Data Centers	One space for every 500 Sq.m. of floor area upto 2000 Sq.m and one space for 1000 Sq.m. thereafter.
4.	Assembly	One space for every 60 Sq.m. of floor area or part thereof or for every 20 seats, whichever is more.
5.	Institutional/ Govt/Semi-Govt.	One space for every 250 Sq.m. of floor area or part thereof.
6.	Lodging Restaurants.	One space for every 100 Sq.m. of floor area or part thereof. One space for every 50 Sq.m. of restaurant seating floor area.
7.	Hospitals	One space for every 150 Sq.m. of total floor area.
8.	Shopping /	One space for 100 Sq.m. of total floor area or part

	Mercantile	thereof.

b) In addition to the above 10% of total parking spaces shall be provided for visitor parking.
c) 20% of the total computed parking shall be provided in the form of two wheeler. The provision shall be computed considering one car space equivalent to four two wheeler parking space and shall be provided as per the dimensions of parking bay specified in table 16 above.
d) The above parking may be provided in the open area of a plot or in the basement or in the stilted area of a building or on the podium of a building. In case of multi –level parking, ramps shall be provided and mechanized methods (car lifts) may also be permitted for manoeuvring purpose.
e) Car parking spaces shall be clearly shown on the site plan along with the manoeuvring space to the satisfaction of SPA of JNPT SEZ.
f) 50% of the Marginal open space around the building may be used for parking and loading, unloading provided that a minimum distance of 3.0 m around the building shall be kept free from any parking and loading, unloading spaces.
g) In addition to the above table, loading and unloading spaces shall be provided for industrial, storage, warehousing and FTWZ land-uses as one space for every 500 Sq.m or part thereof with minimum of two spaces. The loading/ unloading space shall be 3.75 m x 10.0 m.
h) Whenever the existing FSI is enhanced, building permission shall be given only after the provision of additional parking spaces corresponding to the revised total built-up area.
i) Guidelines for parking arrangement shall be followed as given in Appendix II.
j) Each plot shall be a self-contained development capable of accommodating its own parking needs. The use of the public street for parking and staging of trucks and trailers is not allowed. Trailer and truck parking should be within the plots and if more parking spaces are required, they should approach SPA of JNPT SEZ for identification of the off-street parking areas.

NOTES

i. The above standards for parking may be modified with due consideration of the common parking facility provided in the layout by the planning authority.
ii. The above parking may be provided in the form of surface parking within plot, integrated parking within a building (basement or multi-storied), or in an independent building or mechanized car parking.
iii. Single stack parking in basement shall be permitted .Mechanical and automated parking shall be permitted

37 Boundary Walls and Gate

a) The typical design issued by JNPT SPA from time to time shall be

followed.

b) Except with the permission of SPA of JNPT SEZ, the maximum height of a boundary wall shall be 2.0 m above the level of the center line of the front street.

c) At a corner plot, the height of the boundary wall shall be restricted to 0.75rn for a length of 10 m on the front and side of the inter-section and the balance height of 0.75 m if required in accordance with (i) above may be made up of open type construction, to facilitate through vision.

d) In electric sub-stations, transformer stations, institutional buildings like hospitals, industrial buildings and other uses of public utility undertakings, a height up to 2.4 m may be permitted by SPA of JNPT SEZ.

e) No gates of the compound wall shall open outward and shall be provided with a contrivance which shall prevent the gate from opening outward on the foot path or road.

f) The entry or exit to the plot situated on the junction of the roads shall be located at least 15 m away from the corner point of the plot on such Junctions, if the length of the plot is less than what is prescribed , such entry exit shall be provided at the farthest end of the plot from the Junction.

38 Tree Plantation

a) The development in any plot of land shall be such as far as practicable preserve existing trees. Where trees are required to be felled, 2 trees shall be planted for every tree to be felled. Tree shall be felled only after the permission of competent Authority.

b) Every plot of land shall have at least one tree for every 100 Sq.m or part thereof, of the plot area. Where the number of existing trees in the plot is less than the above prescribed standard, additional number of new trees shall be planted. The gross minimum number of trees in a plot with existing and newly planted shall be 10.

c) Where the Tree Authority having jurisdiction in the area under development has prescribed standards or regulations in respect of preservation of trees under the Maharashtra (Urban Area) Preservation of Trees Act, 1975, the same shall supersede the sub-regulation (ii) above.

d) Only Indigenous trees shall be planted as prescribed by SPA.

PART III - FIRE PROTECTION & LIFE SAFETY REGULATIONS

39 Fire Protection and Life Safety Regulations

39.1 Fire protection and life safety regulations

They shall apply to development on any land in the notified areas of SPA of JNPT SEZ. In particular, they shall apply to buildings which are more than 15m in height and to special buildings like assembly, institutional, industrial, storage and hazardous and mixed occupancies with any of the aforesaid occupancies having area more than 150 Sq.m.

All Building will require provisional Fire NOC before the Development Permission and The Final Fire NOC before the Grant of part/full Occupancy Certificate from the Chief Fire Officer of SPA of JNPT SEZ.

39.2 Definitions

Words and expressions not defined in these Regulations shall have the same meaning or sense as is assigned in the MR&TP Act 1966 and the DC Regulations for the Notified Areas SPA of JNPT SEZ.

39.2.1 "Automatic Fire Detection & Alarm System": Fire alarm system comprising components for automatically detecting a fire, initiating an alarm of fire and initiating other actions as appropriate. The system may include manual fire alarm call points.

39.2.2 "Automatic sprinkler system" means a system of water pipes fitted with sprinkler heads at suitable intervals and heights and designed to actuate automatically control and extinguish a fire by the discharge of water.

39.2.3 "Booster fire pump" means a mechanical/electrical device which boosts up the water pressure at the top level of a multi-storied/high rise building and which is capable of a pressure of 3.2 kg/cm2 at the nearest point.

39.2.4 "Combustible Materials" means a material, which either burns itself or adds heat to a fire when tested for non-combustibility in accordance with IS: 3808 - 1979 method of test for Combustibility of Building Materials.

39.2.5 "Down Comer" : An arrangement of firefighting with in a building by means of down comer pipe connected to terrace tank through terrace pump, gate valve and non-return valve and having mains not less than 100 mm internal diameter with landing valve on each floor / landing. It is also fitted with inlet connections at ground

39.2.6 "Dry Riser" An arrangement of the firefighting within the building by means of vertical rising mains not less than 100 mm internal diameter with landing valves on each floor / landing which is normally dry but is capable of being charged with water usually by pumping from fire service appliances.

39.2.7 "Emergency Lighting" Lighting provided for use when the supply to the normal lighting fails.

39.2.8 "Emergency Lighting System" A complete but discrete emergency lighting installation from the stand by power source to the emergency lighting lamp(s) for e.g. self-contained emergency luminaire..

39.2.9 "Enclosed Staircase" means staircase separated by fire resistance walls and doors from the rest of the building.

39.2.10"Escape Lighting" That part of emergency lighting which is provided to ensure that the escape route is illuminated at all material times, for example, at all times when persons are on the premises, or at times the main lighting is not available, either for the whole building or for the escape routes.

39.2.11"Escape Route" shall mean any corridor, staircase or other circulation space, or any combination of the same, by means of which a safe place in the open air at ground level can eventually be reached.

39.2.12"Exit" means a passage, channel or means of egress from any building, storey or floor area to a street or other open space of safety; with horizontal, outside, and vertical exits having meanings at (i), (ii) and (iii) respectively as under:

i. "**Horizontal Exit"** An arrangement which allows alternative egress from a floor area to another floor at or near the same level in an adjoining building or an adjoining part of the same building with adequate fire separation.

ii. **"Outside Exit"** means an exit from a building to a public way, to an open area leading to a public way or to an enclosed fire resistant passage leading to a public way.

iii. **"Vertical Exit"** means an exit used for ascending or descending between two or more levels, including stairways, smoke-proof towers, ramps, escalators and fire escapes.

39.2.13 "Fire and/ or Emergency Alarm System" means an arrangement of call points or detectors, sounders and other equipment for the transmission and indication of alarm signals, and working automatically or manually in the case of fire or other emergency.

39.2.14 "Fire Exit" A way out leading to an escape route having panic bar hardware provided on the door.

39.2.15 "Fire Lift" means the lift installed to enable fire service personnel to reach different floors with minimum delay, having such features as required in accordance with this rules.

39.2.16 "Fire Proof Door" means a door or shutter fitted to a wall / opening and constructed and erected with the requirement to check the transmission of heat and fire for a specified period.

39.2.17 "Fire Pump" means a machine, driven by external power for transmitting energy to fluids by coupling the pump to a suitable engine or motor, which may have varying outputs/capacity but shall be capable of having a pressure of 3.2 kg/cm^2 at the topmost level of a multi-storey or high rise building.

39.2.18 "Fire Resistance" means the time during which it fulfils its function of contributing to the fire safety of a building when subjected to prescribed conditions of heat and load or restraint. The fire resistance test of structures shall be done in accordance with IS: 3809 - 1979 Fire Resistance Test of Structures.

39.2.19 "Fire Resisting Wall" A fire resistance rated wall, having protected openings, which restricts the spread of fire and extends continuously from the foundation to at least 1m above the roof.

39.2.20 "Fire Separation" means the distance in meters measured from any other building on the site or from another site, or from the opposite side of a street or other public space to the building.

39.2.21 "Fire Service Inlet" means a connection provided at the base of a building for pumping up water through-in-built fire-fighting arrangements by fire service pumps in accordance with the recommendations of the Chief Fire Officer & Fire Advisor to SPA of JNPT SEZ.

39.2.22"Fire Tower" means an enclosed staircase which can only be approached from the various floors through landings or lobbies separated from both the floor area and the staircase by fire-resistant doors and open to the outer air.

39.2.23"Hazardous Material" means -

iv. Radioactive substances;

v. Material which is highly combustible or explosive and/or which may produce poisonous fumes or explosive emanations or storage, handling,

vi. processing or manufacturing of which may involve highly corrosive, toxic or noxious alkalis or acids or other liquids;

vii. Other liquids or chemicals producing flame, fumes, explosive, poisonous, irritant or corrosive gases, or which may produce explosive mixtures of dust or fine particles capable of spontaneous ignition.

39.2.24"Lift well" means unobstructed space within an enclosure provided for the vertical movement of the lift car(s) and any counter weight(s), including the lift pit and the space for top clearance, and maintenance

39.2.25"Means of Egress" A continuous and unobstructed way of travel from any point in a building or structure to a place of comparative safety.

39.2.26"Non-Combustible" means material which does not burn nor add heat to a fire when tested for combustibility in accordance with IS-3808-1966.

39.2.27"Pressurization" The establishment of a pressure difference across a barrier to project a stairway, lobby, escape route or room of a building from smoke penetration.

39.2.28"Smoke-Stop Door" means a door for preventing or checking the spread of smoke from one area to another.

39.2.29"Travel Distance" means the distance to be travelled from the remotest point on a floor of a building to a place of safety be it a protected escape route, external escape route or final exit i.e. vertical exit, horizontal exit or an outside exit measured along the line of travel.

39.2.30"Ventilation" supply of outside air into or the removal of inside air from an enclosed space.

39.2.31"Venting Fire" The process of including heat and smoke to level a building as quickly as possible by such paths that lateral spread of fire and heat is checked, firefighting operations are facilitated and minimum fire damage is caused.

39.2.32"Wet Riser" An arrangement for firefighting within the building by means of vertical rising mains not less than 100 mm nominal diameter with landing valve on each floor /landing for firefighting purposes, and permanently charged with water from a pressurized supply.

39.3 Construction Building Materials

a) Load bearing elements of construction and elements of construction for which the required fire resistance is one hour or more shall be of non-combustible material. Interior finish materials (wall paneling, floors, coverings etc.) may be permitted of materials having their rating for flame spread and smoke developed not exceeding a very low flame spread limit in accordance with IS 1642 - 1989 (Class-1). Ceiling linings shall be of non-combustible or of plaster - board.

b) Stairs and corridors shall not contain combustible materials. All main and fire escape staircases shall be of RCC only for easy evacuation of occupants and carrying out firefighting and rescue operations.

c) Structural members such as supports and bearing walls shall have fire resistance rating of 3 hours, transoms and ceilings to 4 hours.

d) Internal walls and partitions (Fire Sections) walls separating corridor areas of floor that are used for any purpose other than circulation shall have a fire resistance of not less than two hours. There shall be no openings in such walls other than for doors or delivery batches with fire resistance not less than one hour.

e) Facades shall consist of non-combustible building materials. A fire must bridge a distance of at least 0.9 meters between storeys.

39.4 Staircase enclosure

a) The number of exits shall be in accordance with the NBC 2016 as updated from time to time.

b) The internal enclosing walls of staircase shall be of brick or RCC construction having fire resistance of not less than two hours. All enclosed staircases shall have access through self-closing doors of at least one hour fire resistance. These shall be single swing doors opening in the direction of the escape. The door shall be fitted with check action doors closure.

c) The staircase enclosure on external walls of the building shall be ventilated to atmosphere at each landing.

d) Permanent vent at the top equal to 5% of the cross sectional area of the enclosure and openable sashes at each landing level with area not less than 0.5 Sq.m on the external walls shall be provided. The roof of the shaft shall be at least 1m above the surrounding roof. There shall be no glazing or glass bricks in any internal enclosing wall of a staircase. If the staircase is in the core of the building and cannot be ventilated at each landing, a positive pressure of 5 mm w.g. by an electrically operated blower / blowers shall be maintained.

e) The mechanism for pressurizing the staircase shaft shall be so installed that the same shall operate automatically and also with manual operation facilities, when the automatic fire alarm operates.

f) The maximum travel distance that shall be permitted from the farthest exit on a floor to the staircase shall be as follows:

Table 18 Travel distance

Sr. no	Group of Occupancy	Maximum travel distance Construction (in meters)
1	Institutional	30.0
2	Assembly	30.0
3	Business	30.0
4	Mercantile	30.0
5	Industrial	45.0
6	Storage	30.0
7	Hazardous	22.5

Notes

i. For fully sprinkled building, the travel distance may be increased by 50% of the value specified,

ii. Ramps shall be protected with automatic sprinkler system and shall be counted as one of the means of access,

g) Main staircases in buildings of all occupancies shall have a minimum width as specified in table 14 under regulation number 30.

39.5 Lift enclosures

a) The walls enclosing lift shafts shall have a fire resistance of not less than two hours. Shafts shall have permanent vents at the top not less than 1800 sq.cm in clear area. Lift motor rooms shall preferably be sited at the top of the shaft and shall be separated from lift shafts by the enclosing wall of the shaft or by the floor of the motor rooms.

b) Landing doors in lift enclosures shall open in the ventilated or pressurized corridor / lobby and shall have fire resistance of not less than one hour.

c) The number of lifts in one lift bank shall not exceed four. Shafts for fire lift in a lift bank shall be separated from each other by a brick masonry or RCC wall of fire resistance of not less than two hours. Lift car doors shall have fire resistance of not less than one hour.
d) If the lift shaft and lift lobby are in the core of the building, a positive pressure of not less than 2.5 mm and not more than 3 mm w.g. by an electrically operated blower / blowers shall be maintained in the lift lobby and positive pressure of not less than 5mm w.g. shall be maintained in the lift shaft. The mechanism for pressurizing the lift shaft and lift lobby shall be so installed that they shall operate automatically when the automatic fire alarm operate. The mechanism shall have facilities to operate manually (for building more than 24 m in height)
e) Exit from the lift lobby if located in the core of the building shall be through a self-closing smoke stop door of one hour fire resistance.
f) Lifts shall not normally communicate with basement. However, one of the lifts may be permitted to reach the basement levels provided the lift lobby at each basement level is separated from the rest of the basement areas, by fusible link operated fire resistance door of two hours fire resistance. The lobby should be pressurized, to minimize the spread of heat and smoke on upper floors of the building.
g) Exit from lift lobby shall be through a self-closing smoke stop door.
h) Grounding switch / switches at ground floor level to enable the fire service to ground the lift / cars in an emergency shall be provided (for building more than 15 m in height).

39.6 External windows

In case of centrally air-conditioned buildings area of the openable external windows on a floor shall be not less than 2.5% of the floor area. The locks for these windows shall be fitted with budget lock of the carriage key type (which can be opened with the point of a fireman's axe).

39.7 Lifts and fire lifts

Provisions for a fire lift shall be made as per the following details in all buildings more than 15 m only.

Where the height of a building exceeds 24 m at least two lifts shall be provided in the said building.

a. To enable Fire Services personnel to reach to the upper floors with the minimum delay, one of the lifts shall be so designed so as to be available for the exclusive use of the Fireman in emergency and be directly accessible to every dwelling/lettable floor space on each floor.
b. The lift shall have loading capacity of not less than 545 kg. (8 persons lift). The lift shall have a floor area of not less than 1.4 Sq.m.
c. The electric supply shall be on a separate service from electric supply mains in a building and the cables run in a route safe from fire, that is, within the lift shafts.

In case of failure of normal electric supply, it shall be capable of changing over to alternate supply manually through a changeover switch.

d. The operation of a fire lift is by simple toggle or two button switch situated in a glass fronted box adjacent to the lift at the entrance level. When the switch is on, landing call points will control only. When the switch is off, the lift will return to normal working.

e. This lift can be used by the occupants in normal times.

f. The words "FIRE LIFT" shall be conspicuously displayed in fluorescent paint on the lift landing doors at each floor level.

g. For buildings above 24 m in height, collapsible gates shall not be permitted for lifts and shall be solid doors with fire resistance of one hour.

h. Lifts shall not be provided in the staircase well.

i. The speed of the fire lift shall be such that it can reach the top floor from ground level within one minute or 91.5 meters per minute whichever is less.

j. The lift machine room shall be separate and no other machinery shall be installed therein.

k. Firefighting lift should be provided with a ceiling hatch for use in case of emergency

l. Telephone or other communication facilities shall be provided in the lift cars which shall be connected to fire control room of the building.

39.8 Basements

a) Each basement shall be separately ventilated. Vents with cross sectional area (aggregate) not less than 2.5% of the floor area spread evenly round the perimeter of the basement shall be provided in the form of grills or breakable stall boards lights or pavement lights or by way of shafts. Alternatively, a system of air inlets shall be provided at basement floor level and smoke outlets at basement ceiling levels. Inlets and extracts may be terminated at ground level with stall boards or pavement lights as before but ducts to convey fresh air to the basement floor level have to be laid. Stall boards and pavement lights should be in positions easily accessible to the Fire Bridge and clearly marked "SMOKE OUTLETS" or "AIR INLET" with an indication of area served at or near the opening.

b) The staircase of basement shall be of enclosed type having fire resistance of not less than two hours and shall be situated at the periphery of the basement to be entered at ground level only from the open air and in such positions that smoke from any fire in the basement shall not obstruct any exit serving the ground and upper storeys of the building and shall communicate with basement through a lobby provided with fire resisting self-closing doors of one hour fire resistance. If the travel distance exceeds 18.50 m, additional staircases at proper places shall be provided. For fully sprinkled basements the above travel distance may be increased by 50%.

c) Kitchens working on gas fuel, departmental stores and shops shall not be permitted in basement / sub-basement.

d) Openable windows on external wall shall be fitted with such locks that can be opened by a fireman's axe

39.9 Service ducts

a) Service ducts and shafts for electrical conduits, cables etc. shall be enclosed by walls having a fire resistance of not less than two hours. Doors for inspection or access shall also have fire resistance of not less than two hours. All such ducts / shafts shall be properly sealed and fire stopped at all floors levels.
b) Refuse if the cross sectional area exceeds 1 Sq.m. it shall be sealed where it passes a floor by carrying the duct through the floor. The floor within the duct shall be pierced for any service pipe or ventilation trunk and shall fit as closely as possible around any such pipe or trunk.
c) A permanent vent shall be provided at the top of the service shaft of cross sectional area not less than 460 sq.cm or 6.25 sq.cm for each 900 sq.cm of the area of the shaft, whichever is more.

39.10 Refuse Chutes and Refuse chambers

a) Hoppers to refuse chutes shall be situated in well ventilated positions and the chutes shall be continued upwards with an outlet above roof level and with an enclosure wall of non-combustible material with fire resistance not less than two hours. The hoppers shall not be located within the staircase enclosure.
b) Inspection panel and hopper (charging station) opening shall be fitted with tight fitting metal doors, covers having a fire resistance of not less than one hour.
c) Refuse chutes shall not be provided in staircase walls, air-conditioning shafts etc.
d) Refuse-chambers shall have walls and floors or roofs constructed of non- combustible and impervious material and shall have a fire resistance of not less than two hours. They shall be located at a safe distance from exit routes.

39.11 Building services

39.11.1 Electrical Services:

a.) The electric distribution cables / wiring shall be laid in separate duct. The duct shall be sealed at every alternative floor with non-combustible materials having the same fire resistance as that of the duct.

b.) Water mains, telephone lines, intercom lines, gas pipes or any other service line shall not be laid in the duct for electric cables.

c.) Separate circuits for water pumps, lifts, staircases and corridor lighting shall be provided directly from the main switch gear panel and these circuits shall be laid in separate conduit pipes so that fire in one circuit will not affect the others.

d.) The inspection panel doors and any other opening in the shaft shall be provided with air tight fire doors having the fire resistance of not less than two hours.

e.) Medium and Low-Voltage wiring running in shafts and within false ceiling shall run in metal conduit.

f.) An independent and well ventilated service room shall be provided on the ground floor with direct access from outside or from the corridor for the purpose of termination of electric supply cable. The doors provided for the service room shall have fire resistance of not less than two hours.

g.) If the licensee agrees to provide meters on upper floors, the licensee's cables shall be segregated from consumer's cable by providing a partition in the duct.

h.) PVC cables should have an additional sheeting or protection provided by compounds sprayed on after installation because of the notorious secondary damage in case of fire.

39.11.2 Town Gas / L P Gas supply pipes: Where gas pipes are run in the building, the same shall be run in separate shafts exclusively for this purpose and these shall be on external walls, away from the staircases. There shall be no inter connection of this shaft with the rest of floors.

39.12 Staircase and Corridor Lighting:

a.) The staircase and corridor lighting shall be on separate service and shall be independently connected so as it could be operated by one switch installation on the ground floor easily accessible to firefighting staff at any time irrespective of the position of the individual control of the light points, if any. The switch shall be of miniature circuit breaker type.

b.) The staircase and corridor lighting shall also be connected to alternate supply for building exceeding 24 m in height. For assembly, institutional buildings of height less than 24 m the alternate source of supply may be provided by battery continuously trickle, charged from the electric mains.

c.) Suitable arrangements shall be made by installation double throw switches to ensure that the lighting installed in the staircase and the corridor does not get connected to two sources of supply simultaneously. Double throw switch shall be installed in the service room for terminating the stand-by supply.

d.) Emergency lights shall be provided in the staircases / corridor for all buildings above 15 m in height.

39.13 Alternate source of Electric Supply:

A stand-by electric/ diesel generator for high hazard building shall be installed to supply power to staircase and corridor lighting circuits, fire lifts, the stand-by fire pump, smoke extraction and damper systems in case of failure of normal electric supply. The generator shall be capable of taking starting current of all the machines and circuits stated above

simultaneously. If the stand-by pump is driven by diesel engine, the generator supply need not be connected to the stand-by pump. Where parallel HV/LV supply from a separate sub-station is provided with appropriate transformer for emergency, the provision of generator may be waived in consultation with competent Fire Officer authorized by the Chief Fire Officer and Fire Advisor, SPA of JNPT SEZ.

39.14 Transformers:

a.) If transformers are housed in the building between the ground level, it shall be necessarily in the first basement in separate fire resisting room of 4 hours rating. The room shall necessarily be at the periphery of the basement. The entrance to the room shall be provided with a steel door of 2 hours fire rating. A curb (sill) of a suitable height shall be provided at the entrance in order to prevent the flow of oil from ruptured transformer into other part of the basement. The direct access to the transformer room shall be provided preferably from outside.

b.) The switch gears shall be housed in a separate room separated from the transformer bays by a fire resisting wall with fire resistance not less than four hours.

c.) The transformer if housed in basement shall be protected by an automatic high pressure water spray system (Emulsifier System).

d.) In case the transformers housed in the basements are totally segregated from other areas of the basements by 4 hours fire resisting wall /walls with an access directly from outside it may be protected by carbon dioxide or B.C.F. fixed installation system.

e.) When housed at ground floor level it / they shall be cut off from the other portion of premises by fire resisting walls of 4 hours fire resistance.

f.) They shall not be housed on upper floors.

g.) A tank of RCC construction of capacity capable of accommodating entire oil of the transformers shall be provided at lower level, to collect the oil from the catch-pit in case of emergency. The pipe connecting the catch-pit to the tank shall be of non- combustible construction and shall be provided with a flame arrester.

h.) The transformers shall be protected by providing proper fire protection.

i.) No grass or shrubs shall be allowed to grow in transformer switchyard.

j.) A barbed wired fencing of minimum 1.5 m height shall be provided around transformer switchyard & the gate shall be provided for entrance. The gate should be always locked & the keys should be kept with authorized/responsible person of the company.

k.) “Danger”/“No Smoking” board shall be displayed at the entrance gate of transformer switchyard.

39.15 Air Conditioning:

a.) Escape routes like staircases, common corridors, lift lobbies etc. shall not be used as return air passage.

b.) The ducting shall be constructed of substantial gauge metal in accordance with IS 655 - 1963 (Revised) and any revision thereof.

c.) Wherever the ducts pass through firewalls or floors the opening around the ducts shall be sealed with fire resisting materials such as asbestos rope, vermiculite concrete, glass wool etc.

d.) As far as possible, metallic ducts shall be used even for the return air instead of space above the false ceiling.

e.) The materials used for insulating the duct system (inside or outside) shall be of non-combustible material such as glass wool etc.

f.) Area more than 750 sq. m on individual floor shall be segregated by a fire wall and automatic Fire Dampers for isolation shall be provided where the ducts pass through fire walls. The fire dampers shall be capable of operating manually.

g.) Air ducts serving main floor areas, corridors etc. shall not pass through the stair wall.

h.) The air handling units (AHU) shall as far as possible be separate for each floor and air ducts for every floor shall be separate and in no way inter-connected with the ducting of any other floor.

i.) The inspection panels shall be provided in the main turning to facilitate the cleaning of the ducts of accumulated dust and to obtain access for maintenance of fire dampers.

j.) No combustible material shall be fixed near than 150 mm to any duct unless such duct is properly enclosed & protected with non-combustible material (glass, wool or sunglass with neoprene facing enclosed & wrapped with aluminum sheeting) at least 3.2 mm thick and which would not readily conduct heat.

k.) If the air handling unit serves more than one floor, the recommendations given above shall be complied with in addition to the conditions given from ‘l’ to ‘q’ below.

l.) Proper arrangements by way of automatic fire dampers working on smoke detectors for isolating all ducting at every floor from the main riser shall be made.

m.) When the automatic fire alarm operates the respective air handling units of the air conditioning system shall automatically be switched off.

n.) Automatic fire dampers shall be provided at the inlet of the fresh air duct and the return air duct of each compartment / shop on every floor.

o.) Automatic fire dampers shall be so arranged so as to close by gravity in the direction of the air movement and to remain tightly closed upon operating of a smoke detectors.

p.) The air filters of the air-handling units shall be of non-combustible materials.

q.) The air handling unit room shall not be used for storage of any combustible materials.

39.16 Boiler Room

Provisions of Boiler and Boiler Rooms shall conform to Indian Boiler Act. Further, the following additional aspects may be taken into account in the location of Boiler/Boiler Room

a. The boilers shall not be allowed in sub-basement but may be allowed in the basements away from the escape routes.

b. The boilers shall be installed in a fire resisting room of 4 hours fire resistance rating and this room shall be situated on the periphery of the basement. Catch-pits shall be provided at the low level.

c. Entry to this room shall be provided with a composite door of 2 hours fire resistance.

d. The boiler room shall be provided with fresh air inlets and smoke exhausts directly to the atmosphere.

e. The furnace oil tank for the Boiler if located in the adjoining room shall be separated by fire resisting wall of 4 hours rating. The entrance to this room shall be provided with double composite doors. A curb of suitable height shall be provided at the entrance in order to prevent the flow of oil into the Boiler room in case of tank rupture.

f. Foam inlets shall be provided on the external walls of the building near the ground level to enable the fire service to use foam in case of fire.

39.17 Hazardous or inflammable materials

a.) No hazardous materials shall be allowed to be stored or kept in any part of high rise building either as storage or for handling, processing or manufacturing etc.

b.) Use of inflammable solvents for cleaning carpets etc. shall not be allowed inside the building.

c.) No refuse dumps or storage places shall be permitted in the staircase walls.

d.) Liquefied petroleum gas (LPG) shall not be stored or used in basement.

e.) Auto repairs and spray painting shall not be allowed in basement.

f.) Where gas pipes are run in the building, the same shall be run in separate shafts exclusively for this purpose and these shall be on external walls, away from the staircase. There shall be no interconnection of this shaft with the rest of the floors.

g.) Wooden or any other combustible materials shall not be used in staircases, lift lobby and such other places, which connect one floor to other.

39.18 Provision of first aid firefighting appliances

a) The first aid firefighting equipment shall be provided on all floors including basements, occupied terraces, lift rooms, meter rooms, transformer rooms in

accordance with IS 2190 - 1992 or revision thereof and in accordance with PART 4 of NBC 2016. Recommendations for providing First-aid-Firefighting Arrangements in Public Buildings in consultation with the competent fire authority as designated or authorized by the SPA of JNPT SEZ.

b) The firefighting appliances shall be distributed over the building in accordance with prevailing IS: Code of practice for selection, installation and maintenance of portable first-aid fire appliances.

39.19 Fixed firefighting installations:

39.19.1 All buildings depending upon the occupancy use shall be protected by wet riser, wet riser cum down comer automatic sprinkler installation, high pressure water spray or foam generating system etc. as per the details given below in Regulation No 39.19.3 to 39.19.8.

39.19.2 Firefighting Installations / Requirements: The firefighting installations / requirements shall be contained in these regulations.

39.19.3 The Wet Riser installations shall conform to IS 3844-1989 Code of Practice for installation of internal fire hydrants in multi-storied buildings. In addition, Wet Riser shall be designed for zonal distribution ensuring that unduly high pressure are not developed in risers and hose pipes.

In addition to Wet Risers / Wet Riser-cum-down comer, first aid hose reels shall be installed on all the floors of the buildings above 15 m and shall conform to IS 884 - 1985. Specification for first aid hose reel for firefighting (fixed installation). The first aid hose reel shall be connected to one of the female couplings of twin couplings of landing valves of the Wet Riser installations by means of adopter.

39.19.4a) Static Water Storage Tank: A satisfactory supply of water for the purpose of firefighting shall always be available in the form of underground static storage tank with capacity specific for each building with arrangements of replenishment by main or alternative source of supply @ 1000 liters per minute. The static storage water supply required for the above mentioned purpose should entirely be accessible to the fire engines of the local Fire Services. Provision of suitable number of manholes shall be made available for inspection, repairs and inspection of suction holes etc. The covering slab shall be able to withstand the vehicular load of 25 tons. The domestic suction tank connected to the static water storage tank shall have an overflow capable for discharging 2250 liters per minute to a visible drain point from which by a separate conduits, the overflow shall be conveyed to a storm water drain.

b) To prevent stagnation of water in the static water storage tank, the suction tank of the domestic water supply shall be fed only through an overflow arrangement to maintain the level therein at the minimum specified capacity.

c) The static water storage tank shall be provided with a fire brigade collecting breaching with 4 nos. 63 mm dia. (2 nos. 63mm dia. for pump with capacity 1400

liters / minute) instantaneous male inlets arranged in a valve box at a suitable point at street level and connected to the static tank by a suitable fixed pipe not less than 15 cm dia. to discharge water into the tank when required at a rate of 2250 liters per minute.

39.19.5 Automatic Sprinklers:

Auto - sprinklers shall be installed:

a) In basement used as car parks, if the area exceeds 200 Sq.m.
b) In multi-storey basements used as car parks and for housing essential services ancillary to a particular occupancy.
c) Any room or other compartment of a building exceeding 500 Sq.m.
d) Shops that totally exceed 750 Sq.m.
e) All non-domestic floors of mixed occupancy considered to constitute a hazard and not provided with staircases independent of the remainder of a building.
f) Godowns and warehouses as considered necessary.
g) On all floors of the buildings, if the height of the building exceed 60m
h) Dressing rooms, scenery docks, stages and stage basements of theatres.
i) All business, mercantile, residential hotels having building height 24m and above shall have sprinkler system

39.19.6 Automatic high pressure water spray (emulsifier) system:

j) This system shall be provided for protection of indoor transformers.
k) High pressure water spray system shall be provided for all "Class A petroleum products & storage of hazardous gases".

39.19.7 Foam Generation System:

This system shall be provided for protection of boiler rooms with its ancillary storage of furnace oils.

39.19.8 Carbon-Di-oxide Fire Extinguishing System:

Fixed CO2 fire extinguishing installation shall be provided as per IS 6382 - 1984 (or latest edition) Code of Practice for design and installation of fixed CO_2 fire extinguishing system on premises where water or foam cannot be used for fire extinguishment because of the special nature of the contents of the buildings areas to be protected. Where possible FC -227, FM 200, HFP (Heptafluoropropane), Innergen, etc. types of gases may be used for total flooding for fire protection instead of CO_2 installation.

39.20 Fire alarm system:

All buildings with heights mentioned against each shall be equipped with fire alarm system as given in Regulation No. 39.19.1, 39.20.1 and 39.20.2

39.20.1 Residential Hotels above 15 m, Business, Institutional Building above 24 m, Storage Buildings above 15 m, and industrial buildings having built up area above 500:

a. Such buildings shall be equipped with manually operated electrical alarm system with one or more call boxes located at each floor. The location of the call boxes shall be decided after taking into consideration the floor plan with a view to ensure that one or the other call box shall be readily accessible to all occupants of the floor without having to travel more than 22.5 m

b. The call boxes shall be of the "break-glass" type without any moving parts, where the call is transmitted automatically to the control room without any other action on the part of the person operating the call box.

c. All call boxes shall be wired in a closed circuit to a control panel in the control room, so that the floor number where the call box is actuated is clearly indicated on the control panel. The circuit shall also include one or more batteries with a capacity of 48 hours normal working at full load. The battery shall be arranged to be continuously trickle - charged from the electric mains. The circuit may be connected to alternate source of electric supply as defined in Regulation No. 39.11.1.

d. The call boxes shall be arranged to sound one or more sounders so as to ensure that all the occupants of the building shall be warned whenever any call box is actuated.

e. The call boxes shall be so installed that they do not obstruct the exit-ways and yet their location can easily be noticed from either direction. The base of the call box shall be at a height of 1 m from the floor level.

39.20.2 All other buildings exceeding 24 m height excluding those mentioned above:

The building shall, in addition to the manually operated electrical fire alarm system, be equipped with an automatic fire alarm system. The later shall be in addition to the alarm which may be sounded by the actuation of any automatic fire extinguishing system which may be installed in any particular occupancy in accordance with these bylaw. The detectors for the automatic fire alarm shall conform to relevant IS specification Head / Smoke sensitive type Fire Detector and the system shall be installed in accordance with IS 2189 – 1999 or (latest edition) Code of practice of Automatic Fire Detection and Alarm System or any other relevant Indian Standard prescribed from time to time.

Notes:

1. Several types of fire detectors are available in the market but the application of each type is limited and has to be carefully considered in relation to the type of risk and the structural feature of the building where they are to be installed.
2. No automatic detectors shall be required in any room or portion of building which is equipped with an approved installation of automatic sprinklers.

39.21 Lightning protection of buildings:

The lightening protection for the buildings shall be provided as given in Part – 8 "Building Services, Section 2, Electrical Installations" of National Building Code of India 2016.

39.22 Fire control Room

For all buildings with a height of 15 meter and above there shall be a control room on the entrance floor of the building with communication system (suitable public address system) to all floors and facilities for receiving the message from different floors. Details of all floor plans along with the details of the firefighting equipment and installations shall be maintained in the Control Room The Control Room shall also have facilities to detect the fire on any floor through Indicator Boards connecting fire detecting and alarm system on all floors. The staff in charge of control room shall be responsible for the maintenance of the various services and firefighting equipment and installations.

39.23 Refuge area

a. In multi-storied and high-rise buildings, at least one Refuge Area shall be provided on the floor immediately above 24 M
b. It shall be on the external walls as a cantilevered projection or in any manner.
c. It shall have a minimum area of 15 sq.mt. and a minimum width of 3.0 m
d. It shall not be counted in FSI.

39.24 Caretaker for hotels, business, mercantile, industrial, storage and hazardous buildings with height more than 30 m

a) A qualified Fire Officer with experience of not less than 3 years shall be appointed as a care taker who will be available on the premises at all times.
b) The Fire Officer shall -
   i. Maintain the firefighting equipment in good working condition at all times.
   ii. Layout fire orders and fire operational plan.
   iii. Impart training to the occupants of the buildings in the use of firefighting equipment provided on the premises and keep them informed about the fire emergency evacuation plan.
   iv. Keep proper coordination with Local Fire Service.

39.25 Housekeeping:

To eliminate fire hazards a good housekeeping inside the building and outside the buildings shall be strictly maintained by the occupants and / or the owner of the building.

39.26 Fire drills and fire orders:

Fire notices / orders shall be prepared to fulfil the requirements of the firefighting and evacuation from the buildings in the event of fire and other emergency. The occupants shall be made thoroughly conversant with their action in the event of the emergency, by displaying

fire notices at vantage points and also through regular training as per the provisions specified in Part 4 of NBC 2016. Such notices should be displayed prominently in bold lettering.

39.27 Security deposits:

For buildings which are more than 24 M in height the applicant shall deposit and keep deposited an amount of Rs 20,000/- as security deposit, at the time of application to the Chief Fire Officer of SPA of JNPT SEZ for approval under these regulations, for the due performance of the requirements of these regulations. The security deposit shall be refunded without interest, after the grant of Occupancy Certificate.

39.28 Fire Protection Fund Fees and Additional Fire Protection Fund Fees for developments in SPA of JNPT SEZ

The Fire Protection Fund Fees as applicable and amended from time to time are applicable to all new developments in JNPT SEZ area as per the provisions of clause 11 and 25 of Maharashtra Fire Prevention and Life Safety Measures Act 2006.

The additional Fire Protection Fund Fees are applicable to all high rise buildings in addition to Fire Protection Fund Fees.

39.29 Additional requirements for Industrial Buildings, Storage Building and Buildings of Hazardous Use

In addition to the general requirements specified above, the requirements given in Clause Nos. 6.7, 6.8 and 6.9 of Part IV of the National Building Code of India, 2016 shall be complied with for the above group of buildings. In addition the following Annexures specified as per Part IV of the National Building Code of India, 2016 shall be followed for the respective occupancy.

- Annex A - Calorific values of common materials and typical values of fire load density
- Annex B - Broad classification of industrial and Non Industrial occupancies into different degree of hazard.
- Annex C - Fire protection Requirements for high rise buildings – 15m in height or above.
- Annex D – Guidelines for fire drill and evacuation procedures for high rise buildings

39.30 Compartmentation

The building shall be suitably compartmented so that fire/ smoke remain confined to the area where fire incident has occurred and does not spread to the remaining part of the building.

39.31 Passive fire protection required

The passive Fire Protection Requirements shall be as per PART IV of National Building Code of India 2016.

PART – IV OTHER ASPECTS OF DEVELOPMENT

40 Structural design and building services

The following aspects of development shall be governed by the provisions of the National Building Code of India 2016 - Indian Standard Institution or any modifications thereof.

1. Building Materials.
2. Structural Designs.
3. Constructional Practice and Safety.
4. Building services.
    a. Electrical Services
    b. Air Conditioning and Heating
    c. Installation of lifts and escalators
5. Plumbing Services
    a. Water Supplies
    b. Drainage and Sanitation
6. Lightning Protection.

41 Water Supply, Drainage and Sanitary Requirements

The planning, design, construction and installation of water supply, drainage and sanitation and gas supply systems shall be in accordance with the provisions of Part 9 - Plumbing Services of National Building Code of India as amended from time to time**.**

41.1 Requirements of water supply in building.

The total requirements of water supply shall be calculated based on No. of persons on occupant load and area of floors given in table 19 below:

Table 19 Occupant Load

Sr. No.	**Group of Occupancy**	**Occupant Load Gross Area*in Sq.m. per person**
1	Institutional	**15**
2	Assembly	
	a) with fixed or loose seats and dance floors	**0.6 (see Note below)**

Sr. No.	Group of Occupancy	Occupant Load Gross Area*in Sq.m. per person
	b) without seating facilities including dining rooms	**1.5 (see Note below)**
3	Mercantile	
	a) Street floor & sales basement	**3**
	b) Upper sale floors	**6**
4	Business and industrial	**10**
5	Storage, Warehousing, FTWZ	**30**
6	Hazardous storage	**10**

Note: The requirements of water supply for various occupancies shall be as given in Table 20 and 21 or as specified by the SPA of JNPT SEZ from time to time.

Table 20 Per Capita Water Requirements for Various Occupancies/Uses

Sr. No	Type of Occupancy	Consumption per head per day (in liters)
1	Institutional	135
2	Assembly- Auditorium etc. (per seat of accommodation).	15
3	Government and Semi-public business.	45
4	Mercantile (Commercial)	
	(a) Restaurants (per seat)	70
	(b) Other business buildings.	45
5	Industrial	
	(a) Factories where bathrooms are to be provided	45
	(b) Factories where no bath-rooms are required to be provided.	30
6	Storage (including warehousing)	30

Table 21 Flushing Storage Capacities

Sr. No.	Classification of building	Storage capacity.
(1)	**(2)**	**(3)**
1	For Factories and Workshops	900 liters per w. c. seat and 180 liters per urinal seat.

2	For public assembly halls, etc.	900 liters per w. c. seat and 350 liters per urinal seat.

41.2 Drainage and Sanitation Requirements

General

There should be at least one water tap and arrangement for drainage in the vicinity of each water- closet or group of water-closets in all the buildings.

All structures for human occupancy or use on premises, abutting on a sewer or with a private sewage disposal system, shall have adequate sanitary facilities, but in no case less than one water- closet and one other fixture for cleaning purposes.

41.3 Drainage and Sanitation Requirements for Buildings

The requirements for fitments for drainage and sanitation shall be in accordance with **Appendix I**. The following shall be, in addition, taken into consideration:

a) The figures shown are based upon one (1) fixture being the minimum required for the number of persons indicated or part thereof.
b) Building categories not included in the **Appendix I** shall be considered separately by the SPA of JNPT SEZ.
c) Drinking fountains shall not be installed in the toilets.
d) Where there is the danger of exposure to skin contamination with poisonous, infectious or irritating material, washbasin with eye wash jet and an emergency shower located in an area accessible at all times with the passage / right of way suitable for access to a wheel chair, shall be provided.
e) When applying the provision of **Appendix I** for providing the number of fixtures, consideration shall be given to the accessibility of the fixtures. Using purely numerical basis may not result in an installation suited to the need of a specific building. For example, schools should be provided with toilet facilities on each floor. Similarly toilet facilities shall be provided for temporary workmen employed in any establishment according to the needs; and in any case one WC and one washbasin shall be provided.
f) All buildings used for human habitation for dwelling work, occupation, medical care or any purpose detailed in the various Tables in **Appendix I**, abutting a public sewer or a private sewage disposal system, shall be provided with minimum sanitary facilities as per the schedule in the Tables **Appendix I**. In case the disposal facilities are not available, they shall be provided as a part of the building design for ensuring high standards of sanitary conditions in accordance with this section.
g) In all types of buildings, individual toilets and pantry should be provided for

executives and for meeting / seminar / conference rooms, etc. as per the user requirement.

j) Where food is consumed indoors, water stations may be provided in place of drinking water fountains.

42 Fuel Stations and Weigh Bridges

The development of fuel stations and weigh bridges shall be governed by special Regulations as contained in **Appendix III**.

43 Erections of Hoardings and Signage

Prior Approval of JNPT SPA shall be mandatory for erection of Hoarding and Signages.

The erection of hoardings shall be governed by special Regulations as contained in **Appendix V**.

44 Regulations for Physically Challenged Persons

The provisions for physically Challenged shall be governed by the special Regulations as contained in **Appendix IV**.

45 Rainwater Harvesting

The provisions for Rainwater Harvesting shall be governed by Special Regulations as contained in **Appendix VI**

46 Solar Energy Assisted System

The provision for use of non-conventional energy shall be governed by Special Regulations as contained in **Appendix VII**.

APPENDICES

APPENDIX I – Water Supply, Drainage & Sanitary Requirements

A Office Buildings

Sr. No	Fixtures	Public Toilets		Staff Toilets	
		Male	Female	Male	Female
1	2	3	4	5	6
i)	**Executive Rooms and Conference Halls in Office Buildings** Toilet suite comprising one WC, one washbasin (with optional shower stall if building is used round the clock at user's option) Pantry optional as per user requirement	Unit could be common for Male / Female or separate depending on the number of user of each facility		For individual officer rooms	
ii)	**Main Office Toilets for Staff and Visitors**	1 per 25	1 per 15	1 per 25	1 per 15
	a) Water-closet	1 per 25	1 per 15	1 per 25	1 per 15
	b) Ablution tap with each water-closet	1 in each water-closet			
	c) Urinals Add @ 3% for Add @ 2.5 %	Nil up to 6 1 for 7-20 2 for 21-45 3 for 46-70 4 for 71-100	-	Nil up to 6	-
		101-200			
		Over 200			
	d) Washbasins	1 per 25	1 per 25	1 per 25	1 per 25
	e) Drinking water fountain	1 per 100	1 per 100	1 per 100	1 per 100
	f) Cleaner's sink	1 per floor			

B- Factories

Sr. No.	Fixtures	Offices/Visitors		Workers	
		Male	Female	Male	Female
1	2	3	4	5	6
i)	Water-closets (Workers & Staff)	1 for up to 25 2 for 16-35 3 for 36-65 4 for 66-100	1 for up to 15 2 for 16-25 3 for 26-40 4 for 41-57 5 for 58-77 6 for 78-100	1 for up to 15 2 for 16-35 3 for 36-65 4 for 66-100	1 for up to 12 2 for 13-25 3 for 26-40 4 for 41-57 5 for 58-77 6 for 78-100
	For persons 101-200 add	3 %	5 %	3 %	5 %
	For persons over 200 add	2.5 %	4 %	2.5 %	4 %
ii)	Ablution tap	1 in each water-closet	1 in each water-closet	1 in each water-closet	1 in each water-closet
iii)	Urinals	Nil up to 6 1 for 7-20 2 for 21-45 3 for 46-70 4 for 71-100	-	Nil up to 6 1 for 7- 20 2 for 21-45 3 for 46-70 4 for 71-100	-
	For persons 101-200 add	3 %		3 %	
	For persons over 200 add	2.5 %		2.5 %	
iv)	Washbasins in rows or troughs and taps spaced 750 mm c/c	1 per 25 or part thereof	1 per 25 or part thereof	1 per 25 or part thereof	1 per 25 or part thereof
v)	Drinking water fountain	1 per every 100 or part thereof with minimum one on each floor		1 per every 100 or part thereof with minimum one on each floor	
vi)	Cleaner's sink	1 on each floor	1 on each floor	1 on each floor	1on each floor
vii)	Showers/Bathing rooms	As per trade requirements			
iii)	Emergency shower and eye wash fountain	-	-	1 per every shop floor per 500 persons	

NOTE– For factories requiring workers to be engaged in dirty and dangerous operations or requiring them to being extremely clean and sanitized conditions additional and separate (if required so) toilet facilities and if required by applicable Industrial and Safety Laws and the Factories Act must be provided in consultation with the user.

C- Assembly and Convention Halls

Sr. No.	Fixtures	Public		Staff	
		Male	Female	Male	Female
1	2	3	4	5	6
i)	Water-closets	1 per 100 up to 400 Over 400, add at 1 per 250 or part thereof	3 per 100 up to 200 Over 200, add at 2 per 100 or part thereof	1 for up to 15	1 for up to 12
ii)	Ablution tap	1 in each water-closet	1 in each water-closet	1 in each water-closet	1 in each water-closet
iii)	Urinals	1 per 25 or part thereof	-	Nil up to 6 1 for 7-20 2 for 21-45	-
iv)	Washbasins	1per 200 or part thereof		1 for up to 15 2 for 16-35	1 for up to 12 2 for 13-25
v)	Drinking water fountain	1 per 100 persons or part thereof			
vi)	Cleaner's sink	1 per floor			
vii)	Showers/Bathing rooms	As per trade requirements			

NOTES - 1) Some WC's may be European style if desired

2) Male population may be assumed as two-third and female population as one-third.

D- Hospitals with Indoor Patient Wards

Sr. No.	Fixtures	Patient Toilets		Staff Toilets	
		Male	Female	Male	Female
1	2	3	4	5	6
i)	Toilet suite comprising one WC and one washbasin and shower stall	Private room with up to 4 patients		For individual doctor's / officer's rooms	
For General Wards, Hospital Staff and Visitors					
ii)	Water-closets	1 per 8 beds or part thereof	1 per 8 beds or part thereof	1 for up to 15 2 for 16-35	1 for up to 12 2 for 13-25
iii)	Ablution tap	One in each water-closet	One in each water-closet	One in each water-closet	One in each water-closet
		1 water tap with draining arrangements shall be provided for every 50 persons or part thereof in the vicinity of water-closets and urinals			
iv)	Urinals	1 per 30 beds	-	Nil up to 6 1 for 7 to 20 2 for 21-45	-
v)	Washbasins	2 for every 30 beds or part thereof. Add 1 per additional 30 beds or part thereof		1 for up to 15 2 for 16-35	1 for up to 12 2 for 13-25
vi)	Drinking water fountain	1 per ward		1 per 100 persons or part thereof	
vii)	Cleaner's sink	1 per ward		-	
viii)	Bed pan sink	1 per ward		-	
ix)	Kitchen sink	1 per ward		-	

NOTES - 1) Some WC's may be European style if desired.

2) Male population may be assumed as two-third and female population as one-third.

3) Provision for additional and special hospital fittings where required shall be made.

E-Hotels

Sr. No.	Fixtures	Public Rooms		Non-Residential Staff	
		Male	Female	Male	Female
1	2	3	4	5	6
i)	Toilet suite comprising one WC, washbasin with shower or a bath tub	Individual guest rooms with attached toilets		-	
Guest Rooms with Common Facilities					
ii)	Water-closets	1 per 100 persons up to 400 Over 400 add at 1 per 250 or part thereof	2 per 100 persons up to 200 Over 200 add at 1 per 100 or part thereof	1 for up to 15 2 for 16-35 3 for 36-65 4 for 66-100	1 for up to 12 2 for 13-25 3 for 26-40 4 for 41-57 5 for 58-77 6 for 78-100
iii)	Ablution tap	One in each water-closet	One in each water-closet	One in each water-closet	One in each water-closet
		1 water tap with draining arrangements shall be provided for every 50 persons or part thereof in the vicinity of water-closets and urinals			
iv)	Urinals	1 per 50 persons or part thereof	-	Nil up to 6 1 for 7 to 20 2 for 21-45 3 for 46-70 4 for 71-100	-

v)	Washbasins	1 per WC/Urinal	1 per WC	1 for up to 15 2 for 16-35 3 for 36-65 4 for 66-100	1 for up to 12 2 for 13-25 3 for 26-40 4 for 41-57
vi)	Bath (Showers)	1 per 10 persons or part thereof		-	-
vii)	Cleaner's sink	1 per 30 rooms, minimum 1 per floor			
viii)	Kitchen sink	1 per kitchen			
NOTES	1) Some WC's may be European style if desired. 2) Male population may be assumed as two-third and female population as one- third. 3) Provision for additional and special hospital fittings where required shall be made.				

F- Restaurants

Sr. No.	Fixtures	Public Rooms		Non-Residential Staff	
		Male	Female	Male	Female
1	2	3	4	5	6
i)	**Water-closets**	1 per 50 seats up to 200 Over 200 add at 1 per 100 or part thereof	2 per 50 seats up to 200 Over 200 add at 1 per 100 or part thereof	1 for up to 15 2 for 16-35 3 for 36-65 4 for 66-100	1 for up to 12 2 for 13-25 3 for 26-40 4 for 41-57 5 for 58-77 6 for 78-100
ii)	**Ablution tap**	One in each water-closet	One in each water-closet	One in each water-closet	One in each water-closet
		1 water tap with draining arrangements shall be provided for every 50 persons or part thereof in the vicinity of water-closets and urinals.			
iii)	**Urinals**	1 per 50 persons or part thereof	----	Nil up to 6 1 for 7- 20 2 for 21-45 3 for 46-70 4 for 71-100	----
iv)	**Washbasins**	1 per WC	1 per WC	1 per WC	1 per WC
v)	**Cleaner's sink**	1 per restaurant			
vi)	**Kitchen sink /Dish washer**	1 per kitchen			

NOTES: 1) Some WC's may be European style if desired.

2) Male population may be assumed as two-third and female population as one-third.

3) Provision for additional and special fittings where required shall be made.

G- Commercial Complexes

Sr.No.	Fixtures	Shop Owners		Common Toilets in Market/ Mall Building		Public Toilet for Floating Population	
		Male	Female	Male	Female	Male	Female
1	2	3	4	5	6	7	8
i)	**Water-closets**	1 per 8 persons or part thereof		1 for up to 15 2 for 16-35 3 for 36-65 4 for 66-100	1 for up to 12 2 for 13-25 3 for 26-40 4 for 41-57 5 for 58-77 6 for 78-100	1 per 50 (Minimum 2)	1 per 50 (Minimum 2)
ii)	**Ablution tap**	One in each water-closet	One in each water-closet	One in each water-closet	One in each water-closet	One in each water-closet	One in each water-closet
		1 water tap with draining arrangements shall be provided in receiving / sale area of each shop and for every 50 persons or part thereof in the vicinity of water-closets and urinals.					
iii)	**Urinals**	----	----	Nil up to 6 1 for 7-20 2 for 21-45 3 for 46-70 4 for 71-100	----	1 per 50	- - - -
iv)	**Washbasins**	1 per 8 persons or part thereof		1 for up to 15 2 for 16-35 3 for 36-65 4 for 66-100	1 for up to 12 2 for 13-25 3 for 26-40 4 for 41-57	----	- - - -
v)	**Bath / Showers**	1 per 8 persons or part thereof	1 per 6 persons or part thereof	----	----	1 per 50 persons	1 per 50 persons

NOTES: 1) Toilet facilities for individual buildings in a market should be taken same as that for office buildings.

1) Common toilets in the market buildings provide facilities for persons working in shops and their regular visitor

APPENDIX II – Guidelines for Parking and Circulation spaces

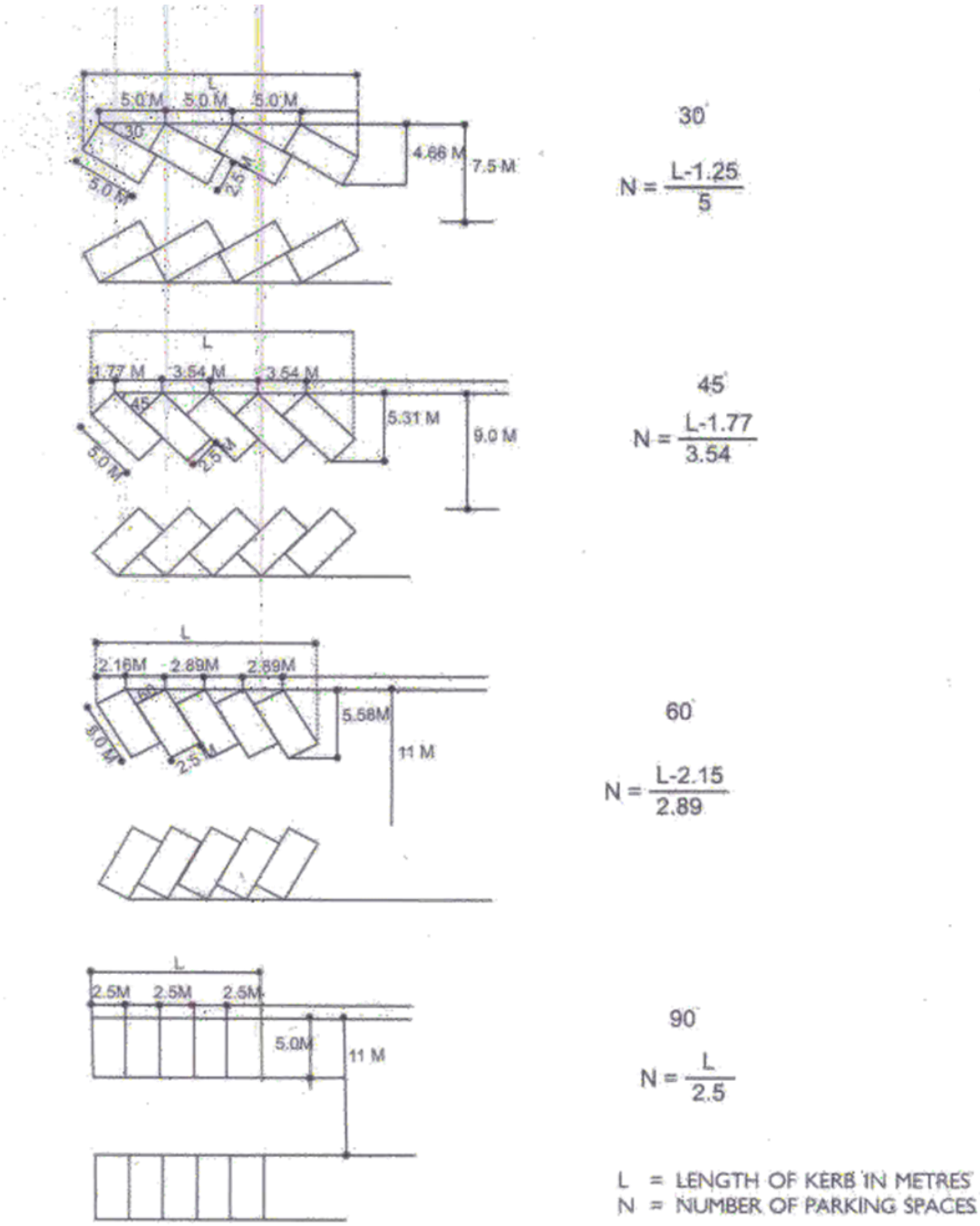

GUIDE LINES FOR CIRCULATION SPACE AROUND PARKING SPACES

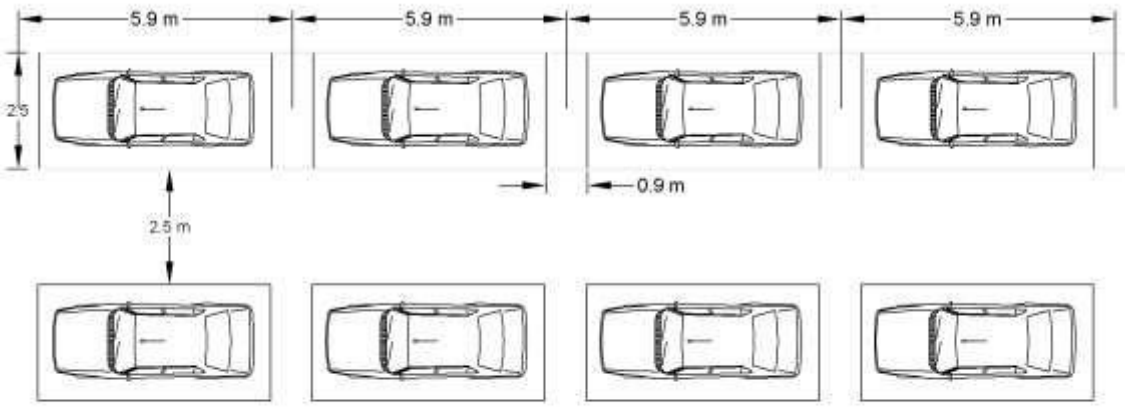

Parallel Car Parking

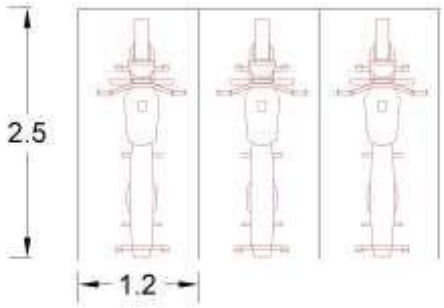

Scooter Parking

APPENDIX III Special provisions for Fuel Stations and Weigh Bridges

(Regulation No-42 of these Regulations)

A Size of the plots for development of petrol filling station shall be as under:

(i) Petrol filling station without service bay: Width 30 m X depth 20m

(ii) Petrol filling station with service bay: Width 40 m x depth 30 m

B Size of the plots for development of weigh bridges shall be as under:

Width 40 m x depth 30 m

1. The following activities may be permitted provided the maximum area under these activities shall not exceed 20% of the plot area:
   a) Retail sale compatible with and related to the operation of the station.
   b) Car washing, petrol filling and maintenance / servicing/ lubrication activities
   c) Telephone Booth / Communication Center / ATM
   d) Fuel station, Administrative office and toilet facilities.
2. The principal function of Petrol Filling Station (PFS) is to provide fuelling facilities as well as air and water for motor vehicles. In general and unless as otherwise specified, vehicular fuels may mean petrol, diesel, oil, liquefied petroleum gas (LPG), compressed natural gas (CNG).
3. In the case of proposal for any retail facilities within the plot for PFS, the setbacks form the boundaries shall be 3 m. Further, the other clearances for installations shall be as per the Petroleum Rules (1937), or any other applicable rules / acts / laws/ any other as per their respective latest amendments.
4. All applicable laws, acts, policies, bye-laws, regulations, etc. of any central / State/ other agencies shall be followed in the location, design and construction of PFS.

C LPG: Storage Godown

D Clearance from the Chief controller of Explosion

For development of Fuel Stations and Storage of petrol, diesel, CNG and LPG approval from the Chief Controller of Explosives shall be required.

APPENDIX IV - Regulations for Erection of Hoardings and Signage

(Regulation No – 43 of these Regulations)

I. Every hoarding shall be designed so as to withstand the wind, dead, seismic and other loads.

II. Sizes of hoardings: The maximum size of hoarding shall be 3 m in height and 7.5 m in length.

III. Maximum height of hoardings on ground: No hoarding shall be erected to a height exceeding 9 m above the ground. The light reflectors may however extend beyond the top of the hoarding. The lower base or the bottom of the hoarding shall be at a height of not less than 2.25 m from surface of ground below.

IV. Distance from Road: A minimum distance of 3 m shall be maintained between the edges of the existing or proposed street, as stipulated by SPA of JNPT SEZ.

V. Distance from the junction of a road: The Hoarding along roads shall not be permitted within a distance of 100 m from the intersection of a road. This distance being measured between hoarding and the center line of a junction.

VI. Any hoarding which in the opinion of SPA of JNPT SEZ is likely to be confused with an authorized traffic sign or signal shall not be permitted.

VII. Any hoarding containing the word 'stop', 'look' 'danger' or other similar word that might mislead or confuse the traveler shall not be permitted.

VIII. No hoarding on roof shall be permitted.

IX. Deposit and Fees:

(i) The fees for erection and maintenance of the hoarding shall be decided by JNPT from time to time.

(ii) The fees for hoarding shall be paid by the applicant in advance, for a calendar year, or part thereof.

I. Prohibition of advertising signs and outdoor display structures in certain cases:

Notwithstanding the above provisions, no advertising sign or outdoor display structures shall be permitted on buildings of architectural, aesthetical, historical or heritage importance as may be decided by SPA of JNPT SEZ, or on Government buildings, save that in the case of Government buildings only advertising signs or outdoor display structures may be permitted if they relate to the activities for the said buildings' own purposes or related programs.

APPENDIX V Special Regulations for Physically Challenged Persons

(Regulation No.44 of these regulations)

1 These regulations or bylaws are applicable to all public buildings and facilities

1.1 a) **Access path/Walk way:** Access path from plot entry and surface parking to building entrance shall be of minimum of 1800 mm while having even surface without any slope. Slope if any shall not have gradient greater than 5%. Selection of floor material shall be made suitably to attract or to guide visually impaired persons (Annexures attached). Finishes shall have a non-slip surface with a texture traversable by a wheel chair. Curbs/kerb wherever provided shall blend to a common level.

b) **Parking:** For parking of vehicles of challenged people the following provisions shall be made:

i. Surface parking for two Car spaces shall be provided near entrance for the physically challenged persons with maximum travel distance of 30 m from building entrance.
ii. The width of parking bay shall be minimum 3.60 m
iii. The information stating that the space is reserved for wheel chair users shall be conspicuously displayed.
iv. Guiding floor materials or on audible signal devise or other devices which serves the same purpose shall be provided to guide visually impaired persons.

2 **Building Requirements:** The specified facilities for the buildings for physically challenged persons shall be as follows:

2.1 a) **Approach to Plinth Level:** Every building should have at least one entrance accessible to the challenged and shall be indicated by proper signage. This entrance shall be approached through a ramp together with the stepped entry.

b) **Ramped Approach:** Ramp shall be finished with non-slip material to enter the building. Minimum width of ramp shall be 1800 mm. With maximum gradient 1:12. Length of ramp shall not exceed 9.0 m having double rail at a height of 800 mm and 900 mm on both sides extending 300 mm, beyond top and bottom of the ramp. Minimum gap from the adjacent wall to the hand rail shall be 50 mm.

2.2 Stepped Approach: For stepped approach size of tread shall not be less than 300 mm and maximum riser shall be 150 mm. Provision of 800-mm high hand rail on both sides of the stepped approach similar to the ramped approach.

2.3 Exit/Entrance Door: Minimum clear opening of the entrance door shall be 900 mm and it shall not be provided with a step that obstructed the passage of a wheel chair user. Threshold shall not be raised more than 12 mm.

2.4 Entrance Landing: Entrance landing shall be provided adjacent to ramp with the minimum dimension 1800 x 2000 mm. The entrance landing that adjoin the top end of a slope shall be provided with floor materials to attract the attention of visually impaired persons (hereinafter referred to as “the said guiding floor material”).

Finishes shall have a non-slip surface with a texture traversable by a wheel chair. Curbs wherever provided should blend to a common level.

3 **Corridor Connecting The Entrance/Exit For The Challenged:** The corridor connecting the entrance\exit for challenged leading directly outdoors to a place where information concerning the overall use of the specified building can be provided to visually impaired persons either by a person or by signs, shall be provided as follows:

a) "Guiding floor materials" shall be provided or devices that emit sound to guide visually impaired persons.
b) The minimum width shall be 1500 mm.
c) In case there is a difference of level, slope ways shall be provided with a slope of 1:12.
d) Hand rails shall be provided for ramps / slope ways.

4 **Stair Ways:** One of the stair-ways near the entrance/exit for the challenged shall have the following provisions:

a) The minimum width shall be 1350 mm.
b) Height of the riser shall not be more than 150 mm and width of the tread 300 mm. The steps shall not have abrupt (square) nosing.
c) Maximum number of risers on a flight shall be limited to 12.
d) Hand rails shall be provided on both sides and shall extend 300 mm. on both sides and shall extend 300 mm on the top and bottom of each flight of steps.

5 **Lifts:** Wherever lift is required as per bye-laws, provision of at least one lift shall be made for the wheel chair user with the following cage dimensions (as per B/S). Clear internal depth, 1100 mm; clear internal width: 2000 mm, Entrance door width: 900 mm

a) A hand rail not less than 600 mm long at 900 mm. above floor level shall be fixed adjacent to the control panel. Also, switch control shall be at an operating height equal to that of hand rails.
b) The lift lobby shall be of an inside measurement of 1800 x 1800 mm or more.
c) The time of an automatically closing door should be minimum 5 seconds and the closing speed should not exceed 0.25 m/sec.
d) The interior of the case shall be provided with a device that audibly indicates the floor the cage has reached and indicates that the door of the cage for entrance/exist is either open or closed.
e) The lift meant for paraplegics/Physically Challenged shall be available on each floor with proper signage.
f) Also, this lift in case of power failure or any such emergent situations shall reach to the nearest floor.
g) Provide for facilitating the visually impaired lift users by specifying lift buttons with symbols in braille language.

6 **Toilets:** One special W.C. in a set of toilet shall be provided for the use of physically

challenged with essential provision of wash basin near the entrance for the physically challenged.

a) The minimum size shall be 1500 x 1750 mm.
b) Minimum clear opening of the door shall be 900 mm and the door shall swing out.
c) Suitable arrangement of vertical/horizontal handrails with 50 mm. clearance from wall shall be made in the toilet.
d) The W.C. seat top shall be 500 mm from the floor.

One of the wash basins in the toilet block on each floor shall be fixed at height of 75 cm above the finished floor level, with a tap. A similar arrangement has to be made for the drinking water facility.

APPENDIX VI Special Regulations for Rain Water Harvesting

(Regulation No- .45 of these Regulations)

The following Provisions shall be applicable for Installation of Rain Water Harvesting Structures (RWHS).

Provided that the SPA of JNPT SEZ may approve the Rain Water Harvesting Structures of specifications different from those specified here below, subject to the minimum capacity of rain water harvesting being ensured in each case.

Rain water harvesting in a building site includes storage or recharging into ground of rain water falling on the terrace or on any paved or unpaved surface within the building site.

In case of the plots where the water table is high i.e. 10 feet or less, it is not mandatory to follow the above provisions.

The following systems may be adopted for harvesting the rain water drawn from terrace and the paved surface.

Open well of a minimum of 1 m dia. and 6 m depth into which rain water may be channelled and allowed after filtration for removing silt and floating material. The well shall be provided with ventilating covers. The water from the open well may be used for non-potable domestic purposes such as washing, flushing and for watering the garden etc.

Rain water harvesting for recharge of ground water may be done through a **bore well** around which a pit of one meter width may be excavated up to a depth of at least 3 m and refilled with stone aggregate and sand. The filtered rain water may be channelled to the refilled pit for recharging the bore well.

An impervious surface / underground storage tank of required capacity may be constructed in the setback or other open space and the rain water may be channelled to the storage tank. The storage tank shall always be provided with ventilating covers and shall have draw-off taps suitably placed so that the rain water may be drawn off for domestic, washing, gardening and such other purposes. The storage tanks shall be provided with an overflow.

The surplus rain water after storage may be recharged into ground through percolation pits or trenches or combination of pits and trenches. Depending on the geomorphological and topographical condition, the pits may be of the size of 1.20 m width x 1.20 m length x 2.00 m to 2.50 m depth. The trenches can be or 0.60 m width x 2.00 to 6.00 m length x 1.50 to 2.00 m depth. Terrace water shall be channelled to pits or trenches. Such pits or trenches shall be back filled with filter media comprising the following materials:

- 40 mm stone aggregate as bottom layer up to 50% of the depth;
- 20 mm stone aggregate as lower middle layer up to 20% of the depth;
- Coarse sand as upper middle layer up to 20% of the depth ;
- A thin layer of fine sand as top layer.

Top 10% of the pits / trenches will be empty and a splash is to be provided in this portion in such a way that roof top water falls on the splash pad.

Brick masonry wall is to be constructed on the exposed surface of pits / trenches and the cement mortar plastered.

The depth of wall below ground shall be such that the wall prevents lose soil entering into pits / trenches. The projection of the wall above ground shall at least be 15 cm.

Perforated concrete slabs shall be provided on the pits / trenches.

If the open space surrounding the building is not paved, the top layer up to a sufficient depth shall be removed and refilled with course sand to allow percolation of rain water into ground.

The terrace shall be connected to the open well / bore well / storage tank / recharge pit / by means of HDPE / PVC pipes through filter media. A valve system shall be provided to enable the first washings from roof or terrace catchment, as they would contain undesirable dirt. The mouths of all pipes and opening shall be covered with mosquito (insects) proof wire net. For the efficient discharge of rain water, there shall be at least two rain water pipes of 100mm dia. for a roof area of 100 Sq.m

Rain water harvesting structures shall be sited as not to endanger the stability of building or earthwork. The structures shall be designed such that no dampness is caused in any part of the walls or foundation of the building or those of an adjacent building.

The water so collected / recharged shall as far as possible be used for non-drinking and non-cooking purpose.

Provided that when the rain water in exceptional circumstances will be utilized for drinking and / or cooking purpose, it shall be ensured that proper filter arrangement and the separate outlet for by passing the first rain-water has been provided.

Provided further that it will be ensured that for such use, proper disinfectants and the water purification arrangements have been made.

APPENDIX VII Regulations for Installation of Solar Energy Assisted Systems

(Regulation No. 46 of these Regulations)

1 Definitions

Unless the context otherwise requires, the following definitions shall be applicable for the purpose of this Regulation.

Sr. No.	Title	Description
i)	"Solar Assisted Water Heating System" (SAWHS)	A devise to heat water using solar energy as heat source
ii)	"Auxiliary Back Up"	Electrically operated or fuel fired boilers / systems to heat water coming out from solar water heating system to meet continuous requirement of hot water
iii)	"New Building"	Such buildings for which construction plans have been submitted to competent authority for approval
iv)	"Existing Building"	Such buildings which are licensed to perform their respective business

2 Solar Assisted Water Heating Systems (SAWHS): "Buildings of the following categories shall provide the system or the installation having an auxiliary Solar Assisted Water Heating System (SAWHS).

- Hospitals and Nursing Homes.
- Hotels, Lodges and Guesthouses.
- Hostels of Schools, Colleges, Training Centers.
- Barracks of armed forces, paramilitary forces and police.
- Functional Building of Railway Stations and Airports like waiting rooms, retiring rooms, rest rooms, inspection bungalows and catering units.
- Community Centers, Banquet Halls, Barat Ghars, Kalyan Mandaps (Marriage Halls) and Buildings for similar use "

3 Installation of Solar Assisted Water Heating Systems (SAWHS): The following provisions shall be applicable for installation of Solar Energy Assisted Systems.

Adequate provisions shall be made for installation of SAWHS in the building design itself for an insulated pipeline from the rooftop to various distribution points, within the aforesaid occupancies. The building must have a provision for continuous water supply to the solar water heating system.

In case of hot water requirement, the building should also have open space on the rooftop, which receives direct sunlight. Wherever hot water requirement is continuous, auxiliary heating arrangement either with electric elements or oil of adequate capacity can be provided.

The load bearing capacity of the roof should at least be 50 kg. Per Sq.m All new buildings of above said categories must complete installation of solar water heating systems before obtaining necessary permissions to commence their activities.

The capacity of solar water heating system to be installed on the building different categories shall be decided in consultation with the Planning / Local Authority concerned. The recommended minimum capacity shall not be less than 25 liters per day for each bathroom and kitchen subject to the condition that maximum of 50% of the total roof area is provided with the system.

Installation of SAWHS shall conform to BIS (Bureau of Indian Standards) specifications IS 12933. The solar connectors used in the system shall have the BIS certification mark.

Building permissions for all the new constructions / buildings of the aforesaid categories shall be granted only if they have been complied with these provisions.

In case of existing building, the above provisions shall be mandatory at the time of change of use / expansion of use to any of the categories specified in 32.2 above, provided there is already a system or installation for supplying hot water.

4 **Solar Assisted Electric Equipment (Photo Voltaic Equipment):** In addition to the above provisions, buildings of all categories, especially public buildings, large holdings of commercial complexes may provide an auxiliary system of solar electricity for staircase lighting, garden area lighting or any other places wherever feasible within the premises. The installations shall conform to the specifications, to be certified by the registered practitioner in this field or the norms stipulated by the Govt. of Maharashtra or any other authority designated for this purpose such as BIS, etc., from time to time.

APPENDIX VIII - Forms

Form No. -1

Form for Application for Development Permission

To,

The Chief Manager (PPD),

JNPT SEZ

Admin Building, Sheva

Navi Mumbai 400707

Sir,

I/We hereby submit application seeking development permission for the intended development work in accordance with the provisions of section 44 of Maharashtra Regional & Town Planning Act 1966 pertaining to building / project……...on plot number…….,situated on road / street…….,Sector…… of village…….……., Taluka Uran, District Raigad of JNPT SEZ.

I/We forward herewith the following plans and statements in quadruplicate, wherever applicable, signed by me and the Licensed Architect (*Name in block letters*) License No. COA/……/…… who have prepared the plans/design and a copy of other statements/ documents as applicable in accordance with the Development Control and Promotion Regulations applicable for JNPT SEZ, Special Planning Authority.

These plans & documents pertain to:

1. Key Plan, location plan and site plan
2. Measurement plan attached to possession receipt
3. Sub-division (Land or building) Layout plan
4. Building Plans
5. Service Plans
6. Particulars of Development in prescribed form
7. Ownership Title (Lease Deed)
8. Attested copy of receipt for payment of application/building scrutiny fees
9. Clearance Certificate of Tax Arrears
10. Landscape/tree plantation plan
11. Specifications of proposed construction giving type and grade of materials to be used duly signed by qualified architect / structural engineer.
12. Certificate of supervision in the prescribed form given in **Form 4** and **Form 7** by the qualified architect and structural engineer respectively.
13. All the drawings attached in soft copies of prescribed formats and scanned copies of

all the attached documents on pen-drive / email.

I/We request that the proposed development/Construction may be approved and permission accorded to me/us to execute the work.

Date :
Place:
Name of Applicant /Authorised Signatory:
Address:
Email ID:
Contact No:

Form No. - 2

Form for appointment of Architect

Date:

To,
The Chief Manager (PPD),
JNPT SEZ.
Admin Building, Sheva
Navi Mumbai 4000707

Sir,

Sub:

Ref:

Further to my letter ref. no…….. Dated…….for the project……..on plot number……., situated on road / street……., Sector…… of village…….……., Taluka Uran, District Raigad. of JNPT SEZ, I am pleased to inform you that I have engaged the service of a consulting Architect whose name, address and registration No. are given below:

Name

Address

Reg. No.

I am enclosing herewith the letter of consent along with the Supervision Memo from the registered Architect.

Thanking you.

Yours faithfully

( )

Signature of the Applicant

Date :
Place:
Name of Applicant /Authorised Signatory:
Address:
Email ID:
Contact No:

c.c.to: Architect

Form No. - 3

Form for Acceptance by Architect

Date:

To,
The Chief Manager (PPD),
JNPT SEZ.
Admin Building, Sheva
Navi Mumbai 4000707

Sir,

Sub:

Ref:

With reference to the letter no…….Dated…….addressed to you by …… I hereby now confirm that I have agreed to act as his Architect for the project……...on plot number……., situated on road / street……., Sector…… of village…….……., Taluka Uran, District Raigad of JNPT SEZ.

Thanking you.

Yours faithfully

( )

Stamp and Signature of the Architect

Name & Address of the Architect:
Registration No:

Contact No:

c.c.to:

1. Lessee

Form no. – 4

Form for Supervision (Registered Architect)

To,

The Chief Manager (PPD),

JNPT SEZ

Admin Building, Sheva

Navi Mumbai 400707

Sir,

I hereby certify that the development work/ erection/re -erection /demolition or material alteration in/ of building for Project …….in plot No. …… situated at Street/ Road …….Sector …….at village ……, Taluka Uran, District Raigad of JNPT SEZ shall be carried out under my supervision and I certify that all the material (type & grade) and the workmanship of the work shall be generally in accordance with the general specifications submitted along with, and that the work shall be carried out according to the sanctioned plans. I shall be responsible for execution of work in all respect.

Signature of Registered Architect:

Name of firm / company:

Name of architect (in block letters):

License Number/COA registration no.:

Address:

Email ID:

Contact number:

Date:

Place:

Form No. - 5

Form for appointment of Structural Engineer

Date:

To
The Chief Manager (PPD),
JNPT SEZ.
Admin Building, Sheva
Navi Mumbai 4000707
Sir,

Sub:

Ref:

Further to my letter ref. no…….Dated…….. for the project……...on plot number……., situated on road / street……., Sector…… of village…….……., Taluka Uran, District Raigad. of JNPT SEZ wherein I have intimated to you the name and address of Architect engaged by me for the above proposal, I am pleased to inform you that I have now engaged the service of a consulting structural engineer whose name, address and registration No. are given below:

Name

Address

Reg. No.

I am enclosing herewith the letter of consent along with the Supervision Memo from the consulting structural engineer.

Thanking you.

Yours faithfully

( )

Signature of the Applicant

Date :
Place:
Name of Applicant /Authorised Signatory:
Address:
Email ID:
Contact No:

c.c.to: 1. Architect

2. Consulting Structural Engineer.

Form No. - 6

Form for Acceptance by Structural Engineer

Date:

To
The Chief Manager (PPD),
JNPT SEZ.
Admin Building, Sheva
Navi Mumbai 4000707
Sir,

Sub:

Ref:

With reference to the letter no. ……Dated……addressed to you by……..I hereby now confirm that I have agreed to act as his Consulting Structural Engineer for the project……...on plot number……., situated on road / street……., Sector…… of village…….……., Taluka Uran, District Raigad. of JNPT SEZ.

Thanking you.

Yours faithfully,

(Consulting Structural Engineer)

Name & Address of the Structural Engineer:

Registration No.:

Contact No:

c.c.to: 1. Architect

2. Lessee

Form No. - 7

Form for Supervision (Structural Engineer)

To,

The Chief Manager (PPD),

JNPT SEZ

Admin Building, Sheva

Navi Mumbai 400707

Sir,

I hereby certify that the development work/ erection/re -erection /demolition or material alteration in/ of building for project ……use in plot No. …… situated at Street/ Road …… Sector……at village ……, Taluka Uran, District Raigad, of JNPT SEZ shall be executed in accordance with my structural design and drawings under my supervision and I certify that all the materials (type and grade) and the workmanship of the work shall be in accordance with the general and detailed specifications submitted along with the application for development permission and that the work shall be carried out according to the sanctioned plans.

Signature of structural engineer

Name of structural engineer:
Address:
Email ID:
Contact No:
Date:
Place:

Form No. - 8

Form for Sanction of Development Permission

Date:

To

(Lessee)

Subject:

Ref.:

Sir,

With Reference to your application for development permission for the project……...on plot number……., situated on road / street……., Sector…… of village…….……., Taluka Uran, District Raigad of JNPT SEZ.

The development permission is hereby granted to construct building on the plot mentioned above under Sec. 45 of Maharashtra Regional and Town Planning Act, 1966 (Mah. XXVII of 1966).

The details of floor wise areas of industrial unit on plot approved are as below:

Sr. No.	Floor	BUA in Sq.m
1		
2		
3		

The development permission is issued with a specific condition to submit Consent to Establish from MPCB within one month from the date of this permission.

The commencement certificate as required under section 45 of the Maharashtra Regional and Town Planning Act, 1966 is enclosed herewith for the building structure referred above.

You will have to submit the structural drawings before commencement of structural works.

The Chief Manager (PPD)
JNPT SEZ

Enclosures: 1. Commencement certificate
2. One set of approved drawings

Form No. - 9

COMMENCEMENT CERTIFICATE

Permission is hereby granted under section 45 of the Maharashtra Regional and Town Planning Act, 1966 (Maharashtra Act no. XXXVII of 1966) to project …….…….use in plot No. …….……. situated at Street/ Road …….……. Sector…….……. at village…….……., Taluka Uran, District Raigad, of JNPT SEZ as per the approved plans and subject to the following conditions for the development work of the proposed …….…….building having built up area…….…….Sq.m.as listed below:

1)…….
2)…….
3)…….
4)…….

Yours faithfully,

(Authorized Signatory),

The Chief Manager (PDD) JNPT SEZ

Form No - 10

Form for Refusal of permission

To,

Sir (Lessee),

With reference to your application No dated ……., for the grant of sanction for the development work/ the erection of a building/ execution of work in Building Project …….in plot no. …….situated at Street/ Road …….Sector …….at village ……., Taluka Uran, District Raigad of JNPT SEZ.

I have to inform you that the sanction has been refused on the following grounds:

1._____

2._____

3. _____

4. _____

5. _____

6. _____

Yours faithfully,

(Authorized Signatory),

The Chief Manager (PDD) JNPT SEZ

Date: _____

Form No - 11

Form for Notice for Commencement of Work

(On letter head of the applicant's company)

To

The Chief Manager (PPD),
JNPT SEZ.
Admin Building, Sheva
Navi Mumbai 4000707

Sir,

I hereby certify that the development work / erection, re-erection or material alteration in / of building / project……...on plot number……..……, situated on road / street……..,Sector No…….. of village…….……., Taluka Uran, District Raigad of JNPT SEZ will commence on date: ..... In accordance with the plans sanctioned, vide C. C. number. ..... dated..... under the supervision of architect Mr/Mrs/M/s …….…..., registration number……

Signature of Applicant:

Date :
Place:
Name of Applicant /Authorised Signatory:
Address:
Email ID:
Contact No:

Form No. - 12

Form for Informing Completion of Work up to Plinth Level

To,
The Chief Manager (PPD),
JNPT SEZ.
Admin Building, Sheva
Navi Mumbai 4000707

Sir,

I hereby inform that the construction up to plinth/column up to plinth level has been completed for the building for use in project……...on plot number……..……, situated on road / street…….,Sector No…….. of village…….……., Taluka Uran, District Raigad of JNPT- SEZ as per your permission vide office communication No …….…….dated…….…….under my supervision and in accordance with the sanctioned plan.

The completed work may be checked and permission given to proceed with further works.

Signature of Registered Architect _____

Name of Registered Architect _____

License Number of Registered Architect_____

Address of Registered Architect _____

Date:

Form No. - 13

Form for Approval of Work up to Plinth Level

To,

(Lessee)

Sir,

With reference to your intimation No…….…….dated regarding the completion of construction work up to plinth/columns up to plinth level for Building for Industrial/ Commercial purpose on/ project……...on plot number……..……, situated on road / street…….,Sector No…….. of village…….……., Taluka Uran, District Raigad of JNPT SEZ , I have to inform that the further work may be proceeded as per sanctioned plans/ shall not be proceeded as the construction up to plinth level is not as per sanctioned plans.

Yours faithfully,

Office Communication No: _____ (Authorized Signatory),

Office Stamp: _____ The Chief Manager (PDD) JNPT SEZ

Date: _____

Form No. - 14

Form for Completion Certificate

To
The Chief Manager (PPD),
JNPT SEZ.
Admin Building, Sheva
Navi Mumbai 4000707

Sir,

I hereby certify that the erection/ re-erection or development work in/ on building/ part building on project……...on plot number……..……, situated on road / street…….,Sector No…….. of village…….……., Taluka Uran, District Raigad of JNPT SEZ has been supervised by me and has been completed on according to the plans sanctioned vide office communication No. …….…….dated…….……. .

The work has been completed to my best satisfaction, the workmanship and all materials (type and grade) have been used strictly in accordance with general and detailed specifications. No provisions of the Act or the Building Bye-laws, no requisitions made, conditions prescribed or orders issued there under have been transgressed in the course of the work. I am enclosing three copies of the completion plans, one of which is cloth mounted. The building is fit for occupancy for which it has been erected/ re-erected or altered, constructed and enlarged.

I have to request you to arrange for the inspection and give permission for occupation of the building.

Encl.: as above

Signature of Registered Architect_____

Name of Registered Architect _____

License Number .of Registered Architect_____

Address of Registered Architect_____

Date:

Form No. - 15

Form for Occupancy Certificate

To,

(Lessee)

Sir,

This is to certify that the development work/ erection/ re-erection or alteration in/ of building/ part building project……... on plot number……..……, situated on road / street……,Sector No…….. of village…….……., Taluka Uran, District Raigad of JNPT SEZ completed under the supervision of Structural Engineer/ Architect, License No. …….…….is permitted to be occupied/ not permitted to be occupied on the following grounds:

1_____.

2_____.

3_____.

Yours faithfully,

Office Communication No :_____ (Authorized Signatory),

Office Stamp :_____ The Chief Manager (PDD) JNPT SEZ

Date : _____

Form No. - 16

Form for Indemnity for Grant of Occupancy Certificate for part of Building

(on Rs.-------Stamp) As stipulated from time to time by Supdt. of Stamps

To,
The Chief Manager (PPD),
JNPT SEZ.
Admin Building, Sheva
Navi Mumbai 4000707

Sub:

Sir,

While thanking you to allow me to occupy a portion of the above building before acceptance of the Completion Certificate of the whole building for the plans approved under communication no. …….…….dated…….……., I hereby indemnify SPA of JNPT SEZ against any risk, damage and danger which may occur to occupants and users of the said portion of the building and also undertake to take necessary security measures for their safety.

We say that this undertaking will be binding on me/ us, our heirs, administrators and to our assignees.

Yours faithfully,

Registered Architect:_…….……. Lessee

Form No. - 17

Certificate of Stability of Structure

1. Proposal
2. Ref. No.
3. Name and Address of the Lessee
4. Name and address of Architect

I hereby certify that the structural work of the above proposal has been carried out as per my structural design and details and that the said structure is safe and stable for the purpose for which it is intended.

(Signature of Structural Engineer)

Name of Structural Engineer &
Registration No.

Place:

Date: